THIS DRAWING IS UNPUBLISHED. RELEASED FOR PUBLICATION - ,- .
© COPYRIGHT - BY TYCO ELECTRONICS CORPORATION. ALL INTERNATIONAL RIGHTS RESERVED.

LOC	DIST
AD	00

REVISIONS

P	LTR	DESCRIPTION	DATE	DWN	APVD
	E	REVISED PER ECO-11-000045	04JAN11	DH	DY

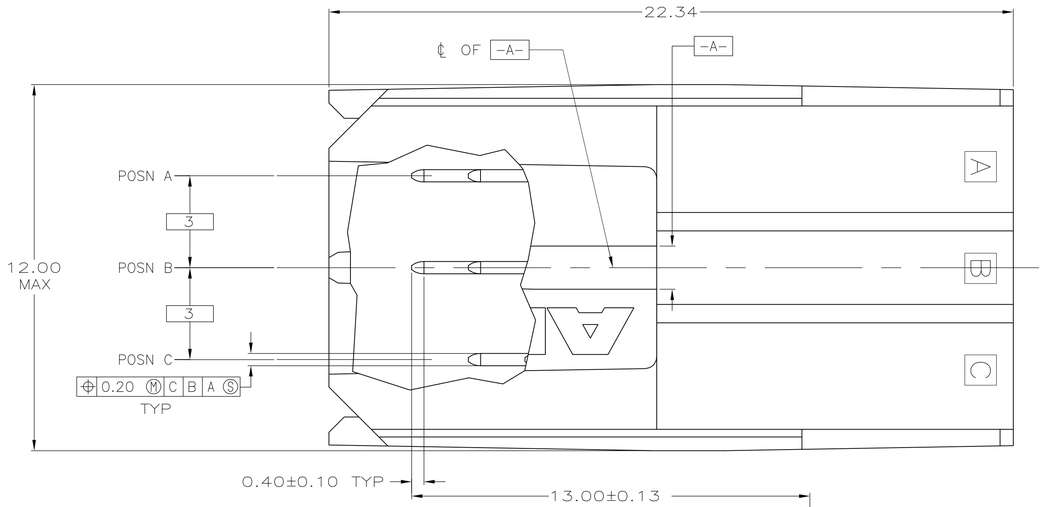

1. MATERIAL: HOUSING: POLYESTER. COLOR: GRAY. UL 94V-0.
   CONTACT: PHOSPHOR BRONZE.
2. FINISH: CONTACT MATING AREA: 1.27μm MIN GOLD OR 0.08μm MIN GOLD OVER 0.76μm PALLADIUM-NICKEL.
   ACTION PIN AREA: 0.5μm MIN TIN LEAD PLATE,
   ALL OVER 1.27μm MIN NICKEL UNDERPLATE.
3. FINISH: CONTACT LUBRICATION WITH BELLCORE APPROVED LUBRICANT. TECHNICAL REFERENCE: TR-NWT-001217 ISSUE 1, SEPT 1992.
4. REFERENCE APPLICATION SPEC 114-1103 FOR RECOMMENDED PLATED THRU HOLE DIAMETER AND PLATING THICKNESSES.
5. CURRENT RATING 10A/CONTACT PER PRODUCT SPEC 108-1651.

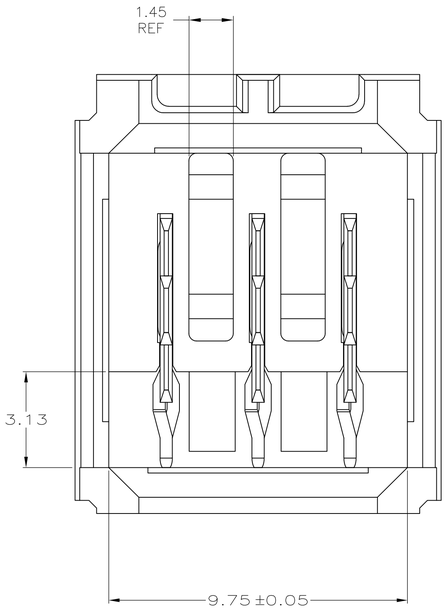

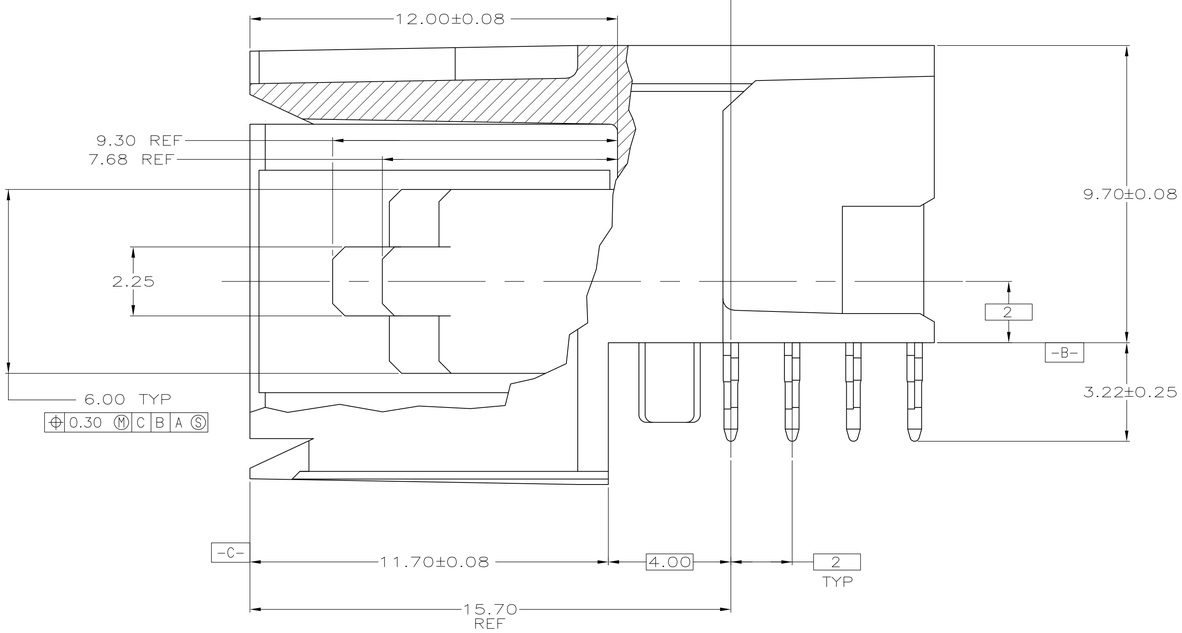

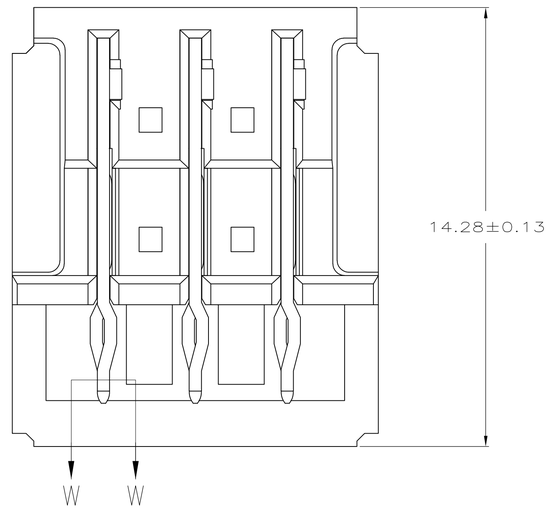

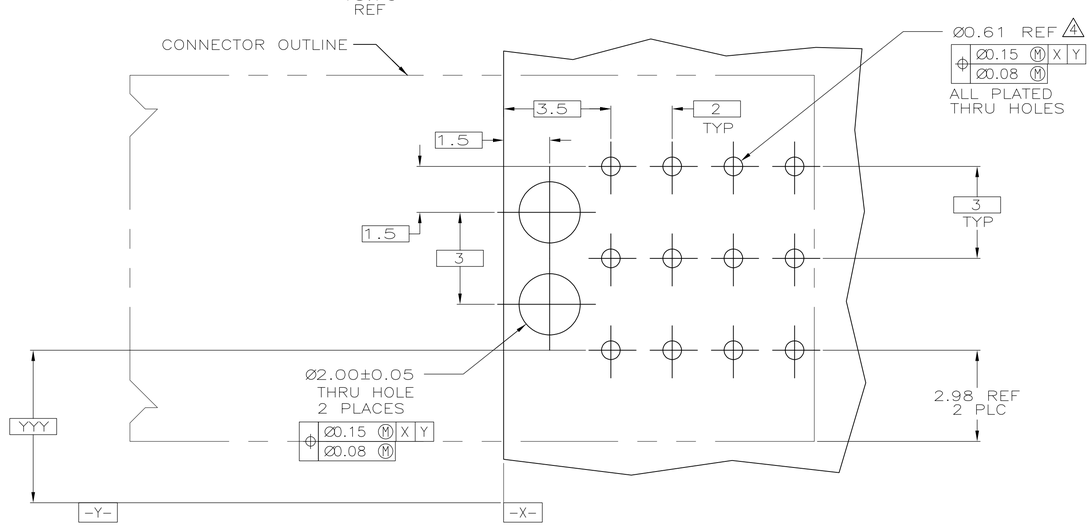

RECOMMENDED PCB HOLE LAYOUT

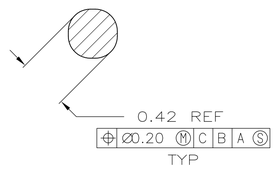

SECTION W-W
SCALE 40:1

223981-1
PART NUMBER

THIS DRAWING IS A CONTROLLED DOCUMENT.	DWN T. SHUEY 10-29-98	Tyco Electronics	Tyco Electronics Corporation Harrisburg, PA 17105-3608
DIMENSIONS: mm	CHK R. PATTERSON 11-2-98		
TOLERANCES UNLESS OTHERWISE SPECIFIED: 0 PLC ± - 1 PLC ± - 2 PLC ± 0.13 3 PLC ± - 4 PLC ± - ANGLES ± -	APVD R. PATTERSON 11-2-98	NAME	ASSEMBLY, RIGHT ANGLE HEADER, W/ RETENTION PEGS, UNIVERSAL POWER MODULE
	PRODUCT SPEC —		
	APPLICATION SPEC —	SIZE A1 / CAGE CODE 00779	DRAWING NO C-223981 / RESTRICTED TO —
MATERIAL 1	FINISH 2 3	WEIGHT —	
		CUSTOMER DRAWING	SCALE 10:1 / SHEET 1 OF 1 / REV E

4805 (1/08)

Downloaded From Oneyac.com

单击下面可查看定价，库存，交付和生命周期等信息

>>TE Connectivity(泰科)

Downloaded From Oneyac.com