THIS DRAWING IS UNPUBLISHED. RELEASED FOR PUBLICATION -,- .
© COPYRIGHT - BY TYCO ELECTRONICS CORPORATION. ALL RIGHTS RESERVED.

LOC	DIST
H	—

REVISIONS

P	LTR	DESCRIPTION	DATE	DWN	APVD
	F	ECR-12-007088	17APR2012	SY	AC

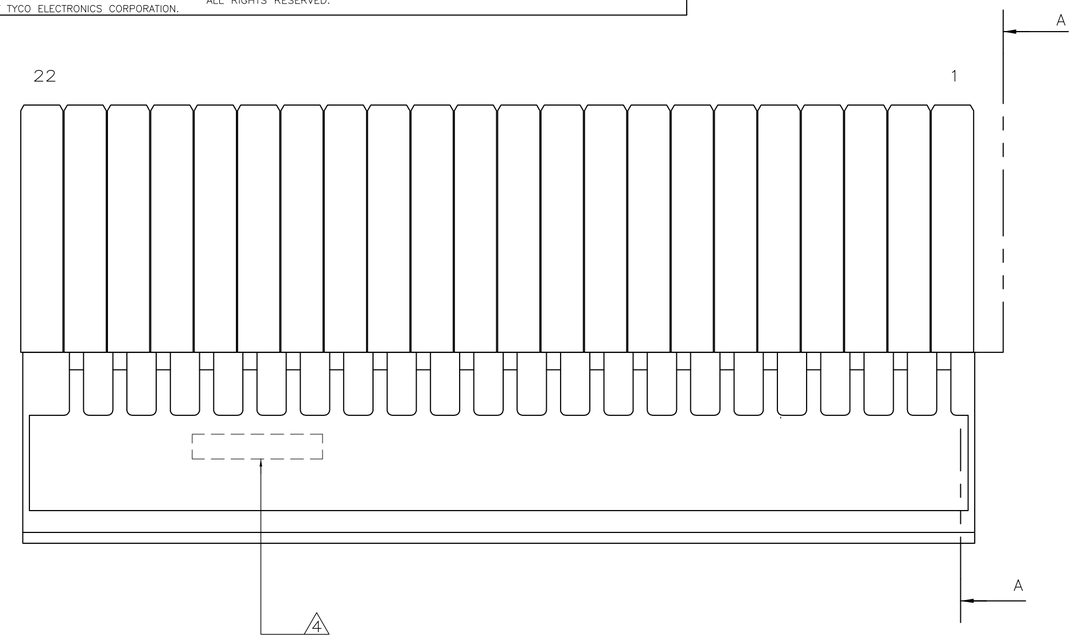

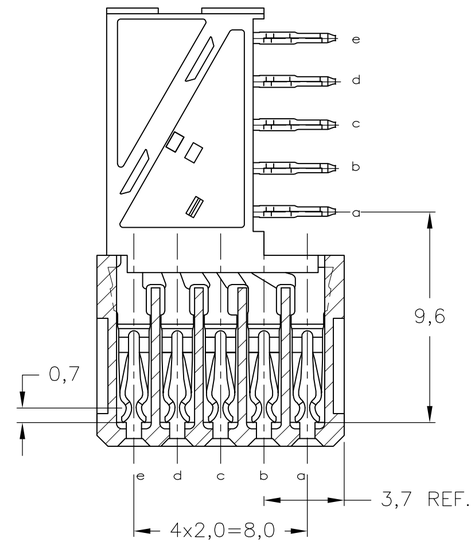

SECTION A–A

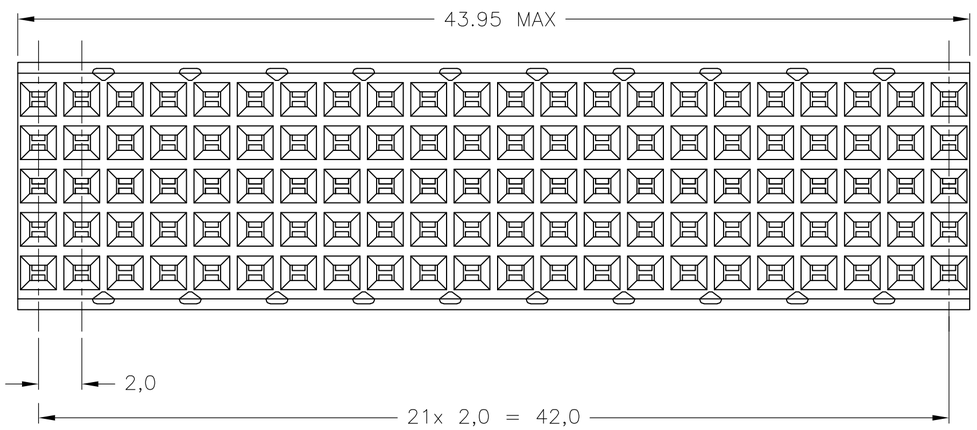

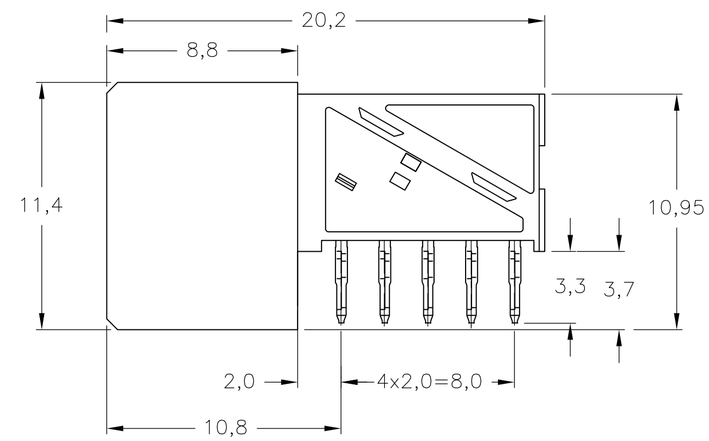

NOTES:

1. MATERIAL CONTACT; PHOSPHORBRONZE
   MATERIAL HOUSING; GLASSFILLED POLYESTER (GRAY) UL–RATING 94V0.
2. GENERAL PLATING SPECIFICATION: UNDERPLATING (ENTIRE CONTACT): 1,27µm NICKEL MIN. AND ACTION PIN: 0,5µm TIN MIN.
   FOR PLATING OF MATING SURFACES SEE APPLICABLE SPECIFICATION REFERENCE FOR EACH DASH NUMBER.
3. CONFORMS TO ALL TESTING ACCORDING IEC 61076–4–101 PERFORMANCE LEVEL 2.
4. CONNECTOR PRINTED WITH PARTNUMBER AND DATECODE
5. PLATED–THROUGH HOLES AT 2x2mm SQUARE GRID. 110 HOLES
6. FITS WITH INTEGRATED GROUND RETURN UPPERSHIELD BASIC P.N. 5352151
7. 0.76µm MIN. GOLD PLATING AT MATING SURFACES.
8. CONNECTOR TESTED AND QUALIFIED AGAINST TELCORDIA, GR–1217–CORE QUALITY LEVEL III, CENTRAL OFFICE APPLICATIONS.

SCALE 2,5:1

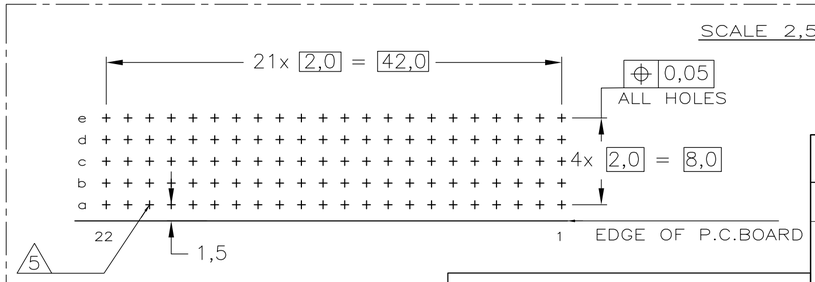

COMPONENT SIDE AS SHOWN
RECOMMENDED PCB–HOLE LAY–OUT

P.C.B. HOLE DIM. ACTION PIN
FOR DETAILS SEE APPLICATION SPECIFICATION

FINISH	MATERIAL	PARTNUMBER
2 3 7	1	3–5188836–0
2 8	1	5188836–9
2 3	1	5188836–1

THIS DRAWING IS A CONTROLLED DOCUMENT.

DIMENSIONS: mm

TOLERANCES UNLESS OTHERWISE SPECIFIED:
0 PLC ± –
1 PLC ± –
2 PLC ± –
3 PLC ± –
4 PLC ± –
ANGLES ± –
±0.2

MATERIAL –
FINISH –

DWN	K.N.KIRAN	13AUG2004
CHK	B.MOOIJ	22MAR2005
APVD	B.MOOIJ	22MAR2005
PRODUCT SPEC	108–19082	
APPLICATION SPEC	114–19029	
WEIGHT	–	

Tyco Electronics
Tyco Electronics Corporation
's–Hertogenbosch,5222AR–32

NAME
Z–PACK 2mm HM
110 POS. FEMALE DAUGHTER CARD CONN.
(22 COLUMNS)

SIZE	CAGE CODE	DRAWING NO	RESTRICTED TO
A2	00779	C–5188836	–

CUSTOMER DRAWING

SCALE	SHEET	OF	REV
5:1	1	1	F

5188836

AMP 1471–9 REV 31MAR2000

Downloaded From Oneyac.com

单击下面可查看定价，库存，交付和生命周期等信息

>>TE Connectivity(泰科)

Downloaded From Oneyac.com