THIS DRAWING IS UNPUBLISHED. RELEASED FOR PUBLICATION -,- .
© COPYRIGHT - BY TYCO ELECTRONICS CORPORATION. ALL RIGHTS RESERVED.

| LOC | DIST |
|---|---|
| ES | 00 |

REVISIONS

| P | LTR | DESCRIPTION | DATE | DWN | APVD |
|---|---|---|---|---|---|
| | A | REVISED ECR-07-000873 | 16JAN07 | C.Z | S.Y |

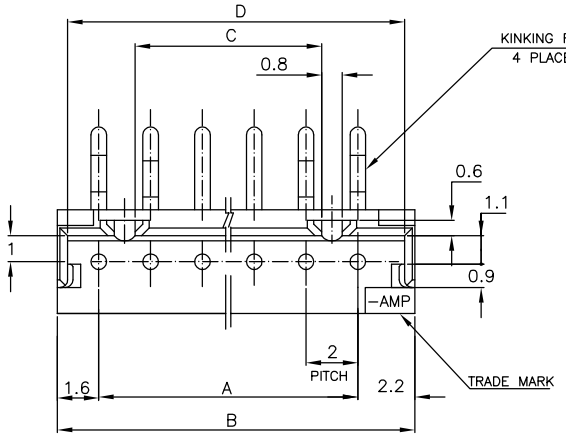


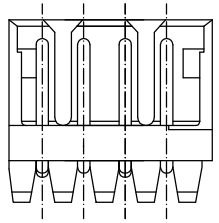

4 Pos.
(SCALE 4-1)

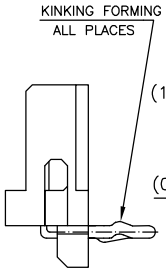


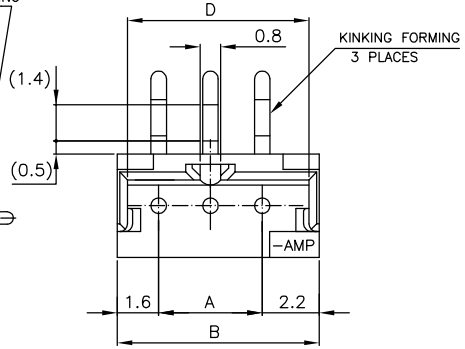


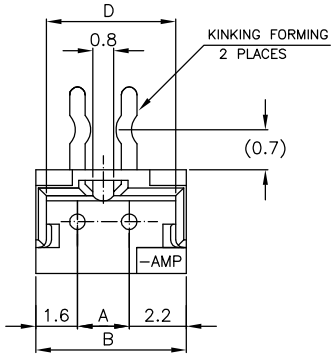


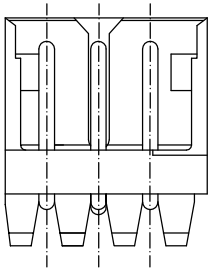

3 Pos.

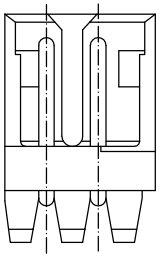

2 Pos.

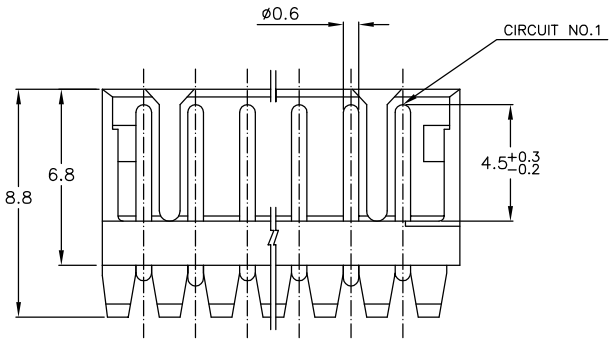


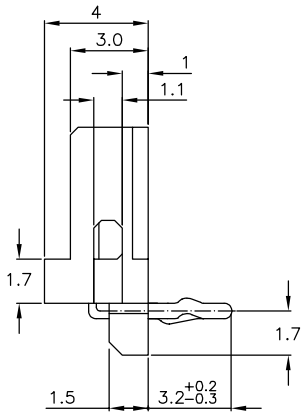


5~15 Pos.

| | | | | | | | | | | | | | | | |
|---|---|---|---|---|---|---|---|---|---|---|---|---|---|---|---|
| 7-292253-5 | | 5-292253-5 | | 3-292253-5 | | 1-292253-5 | | 15 | 28 | 31.8 | 25.2 | 31.0 |
| 7- | -4 | 5- | -4 | 3- | -4 | 1- | -4 | 14 | 26 | 29.8 | 23.2 | 29.0 |
| 7- | -3 | 5- | -3 | 3- | -3 | 1- | -3 | 13 | 24 | 27.8 | 21.2 | 27.0 |
| 7- | -2 | 5- | -2 | 3- | -2 | 1- | -2 | 12 | 22 | 25.8 | 19.2 | 25.0 |
| 7- | -1 | 5- | -1 | 3- | -1 | 1- | -1 | 11 | 20 | 23.8 | 17.2 | 23.0 |
| 7- | -0 | 5- | -0 | 3- | -0 | 1- | -0 | 10 | 18 | 21.8 | 15.2 | 21.0 |
| 6- | -9 | 4- | -9 | 2- | -9 | | -9 | 9 | 16 | 19.8 | 13.2 | 19.0 |
| 6- | -8 | 4- | -8 | 2- | -8 | | -8 | 8 | 14 | 17.8 | 11.2 | 17.0 |
| 6- | -7 | 4- | -7 | 2- | -7 | | -7 | 7 | 12 | 15.8 | 9.2 | 15.0 |
| 6- | -6 | 4- | -6 | 2- | -6 | | -6 | 6 | 10 | 13.8 | 7.2 | 13.0 |
| 6- | -5 | 4- | -5 | 2- | -5 | | -5 | 5 | 8 | 11.8 | 5.2 | 11.0 |
| 6- (3) | -4 | 4- | -4 | 2- | -4 | | -4 | 4 | 6 | 9.8 | 3.2 | 9.0 |
| 6- | -3 | 4- | -3 | 2- | -3 | | -3 | 3 | 4 | 7.8 | — | 7.0 |
| 6-292253-2 | | 4-292253-2 | | 2-292253-2 | | 292253-2 | | 2 | 2 | 5.8 | — | 5.0 |
| BLACK | | YELLOW | | BLUE | | NATURAL | | Pos. | A | B | C | D |
| PART NO. | | | | | | | | | | | | |

NOTES:

1. MATERIAL: HOUSING - NYLON 66 (UL94V-0)
   POST - TIN BRASS
2. APPLICABLE RECEPTACLE P/N 173977
3. THIS PART HAS BEEN OBSOLETED.

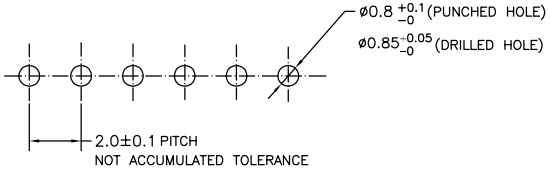


RECOMMENDABLE PCB LAYOUT
(PCB THK:0.8-1.6)

TOLERANCES UNLESS OTHERWISE SPECIFIED:

10≥ * : ±0.2
30≥ * >10 : ±0.25
100≥ * >30 : ±0.3
ANGLE : ±3°

THIS DRAWING IS A CONTROLLED DOCUMENT.

DIMENSIONS: MM

TOLERANCES UNLESS OTHERWISE SPECIFIED:
0 PLC ±-
1 PLC ±-
2 PLC ±-
3 PLC ±-
4 PLC ±-
ANGLES ±-

MATERIAL: SEE NOTE
FINISH: SEE NOTE

| | | |
|---|---|---|
| DWN | S.XU | 31JAN03 |
| CHK | S.YAO | 31JAN03 |
| APVD | T. SASAKI | 31JAN03 |
| PRODUCT SPEC | 108-60016 | |
| APPLICATION SPEC | — | |
| WEIGHT | — | |

tyco Electronics
Tyco Electronics Corporation
SHANGHAI, CHINA

NAME: POST HEADER ASS'Y HORIZONTAL TYPE (AMP CT CONNECTOR 2mm PITCH)

| SIZE | CAGE CODE | DRAWING NO | RESTRICTED TO |
|---|---|---|---|
| A3 | 00779 | C-292253 | — |

CUSTOMER DRAWING | SCALE 5:1 | SHEET 1 OF 1 | REV A

AMP 1470-19 REV 31MAR2000

Downloaded From Oneyac.com

单击下面可查看定价，库存，交付和生命周期等信息

>>TE Connectivity(泰科)

Downloaded From Oneyac.com