THIS DRAWING IS UNPUBLISHED. RELEASED FOR PUBLICATION 2006
© COPYRIGHT 2006 BY - ALL RIGHTS RESERVED.

REVISIONS

P	LTR	DESCRIPTION	DATE	DWN	APVD
	A2	PN3-2; 5-2; 6-2 OBSOLETE Eg00-1426-03	17.04.03	SR	SM
	A3	ECR-09-005436	10MAR2010	VG	MH
	A4	ECR-16-016696	23AUG2017	GCM	MKO

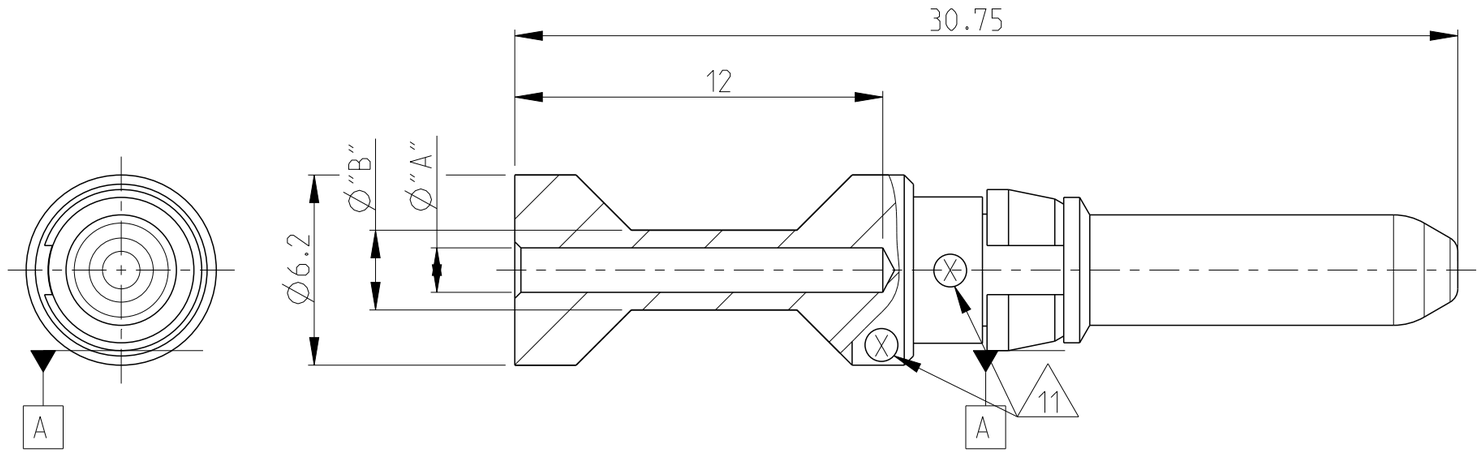

Notes

1. MATERIAL: BRASS
2. FINISH SILVER PLATING: 2 µm Ag MIN. OVER Cu
3. FINISH GOLD PLATING: 0.75 µm Au MIN. OVER Ni
4. NO VENTILATION HOLE REQUIRED AT CROSS-SECTION >4.0 MM²
5. WEIGHT: 3.33 g, VOLUME: 394mm² (APPROX.)
6. SUITABLE SOCKET CONTACT: CUSTOMER DRAWING 1105251
7. SUITABLE INSERTS: SERIES HSM, CUSTOMER DRAWING
8. SUITABLE CRIMP TOOL: PN 1-1105850-8
9. SUITABLE INSERTION TOOL: PN 0-1102855-6
10. SUITABLE EXTRACTION TOOL: PN 0-1102855-4
11. CROSS-SECTION MARKING
12. STANDARDS: DIN EN 61984, DIN EN 60664-1

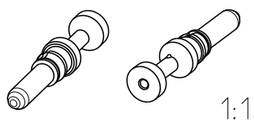

1:1

ORDERING TEXT	PLATING	CROSS SECTION [MM²]	DIMENSIONS "A"	DIMENSIONS "B"	CROSS-SECTION MARKINGS (11)	STRIPPING-LENGTH [mm]
OBSOLETE ~~HSM.Sti.C.Au 10.0mm²~~	GOLD (3)	~~10~~	~~4.35~~	~~5.9~~	~~8~~	~~12~~
OBSOLETE ~~HSM.Sti.C.Au 6.0mm²~~		~~6.0~~	~~3.5~~	~~4.9~~	~~7~~	~~12~~
OBSOLETE ~~HSM.Sti.C.Au 4.0mm²~~		~~4.0~~	~~2.85~~	~~3.9~~	~~6~~	~~12~~
OBSOLETE ~~HSM.Sti.C.Au 2.5mm²~~		~~2.5~~	~~2.2~~	~~3.2~~	~~5~~	~~12~~
OBSOLETE ~~HSM.Sti.C.Au 1.5mm²~~		~~1.5~~	~~1.8~~	~~3.0~~	~~4~~	~~12~~
OBSOLETE ~~HSM.Sti.C.Au 0,75mm²~~		~~0.75-1.0~~	~~1.45~~	~~2.6~~	~~3~~	~~12~~
HSM.Sti.C.Ag 10.0mm²	SILBER (2)	10	4.35	5.9	8	12
HSM.Sti.C.Ag 6.0mm²		6.0	3.5	4.9	7	12
HSM.Sti.C.Ag 4.0mm²		4.0	2.85	3.9	6	12
HSM.Sti.C.Ag 2.5mm²		2.5	2.2	3.2	5	12
HSM.Sti.C.Ag 1.5mm²		1.5	1.8	3.0	4	12
HSM.Sti.C.Ag 0,75mm²		0.75-1.0	1.45	2.6	3	12

PARTS LIST

THIS DRAWING IS A CONTROLLED DOCUMENT.

DIMENSIONS: mm

TOLERANCES UNLESS OTHERWISE SPECIFIED:
0 PLC ±
1 PLC ±
2 PLC ±
3 PLC ±
4 PLC ±
ANGLES ±0.5°

MATERIAL (1)

FINISH (2) (3)

DWN V.GLUMM 10MAR2010
CHK H.BRAUN 10MAR2010
APVD T.SCHNURPFEIL 10MAR2010
PRODUCT SPEC
APPLICATION SPEC
WEIGHT

TE Connectivity

NAME PIN CONTACT SERIES HSM

SIZE	CAGE CODE	DRAWING NO	RESTRICTED TO
A3	00779	C-1105250	-

CUSTOMER DRAWING | SCALE 5:1 | SHEET 1 OF 1 | REV A4

1470-19 (3/13)

Downloaded From Oneyac.com

单击下面可查看定价，库存，交付和生命周期等信息

>>TE Connectivity(泰科)

Downloaded From Oneyac.com