THIS DRAWING IS UNPUBLISHED. RELEASED FOR PUBLICATION -,- .
© COPYRIGHT 2014 Tyco Electronics Japan G.K. ALL RIGHTS RESERVED.

LOC	DIST
J	ZDI

REVISIONS

P	LTR	DESCRIPTION	DATE	DWN	APVD
	B	REVISED	06JUN2014	H.O	N.Y

注 記

1. 材料：ハウジング：ガラス入り熱可塑性ポリエステル（94V-0），色：黒
2. 金属パネルの場合、コネクタ取付け方向をパンチ加工方向にしてください。
3. プラスチックパネルの場合、穴端部にRなき様ご配慮ください。
4. ~~ハウジング全面にテフロン塗装の事。~~

NOTES

1. MATERIAL:HOUSING:GLASS FILED THERMO PLASTIC ,POLYESTER(94V-0),COLOR:BLACK
2. INSERT CONN FROM PRESS DIRECTION SIDE FOR METAL PANEL.
3. EDGE OF THICKNESS WAY MUST NOT ROUND FOR MOLDED PANEL.
4. ~~TO COAT ALL SURFACE OF HOUSING WITH TEFLON.~~

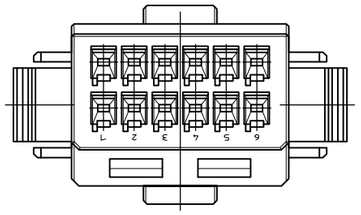

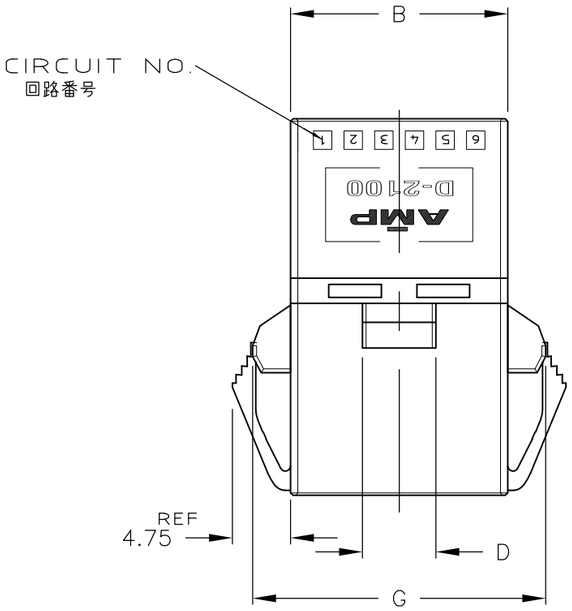

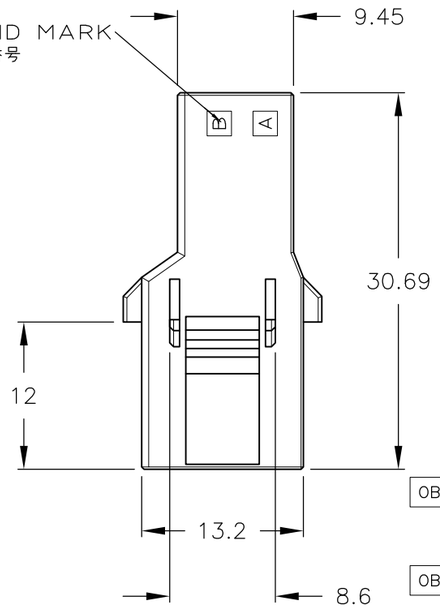

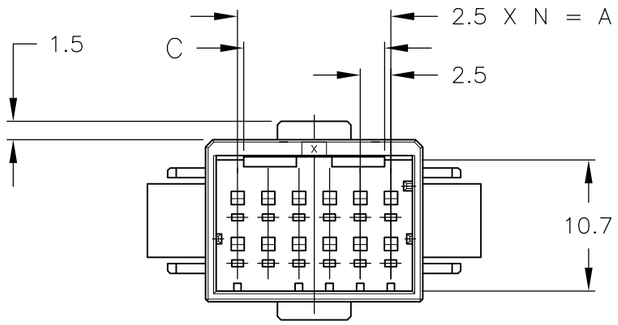

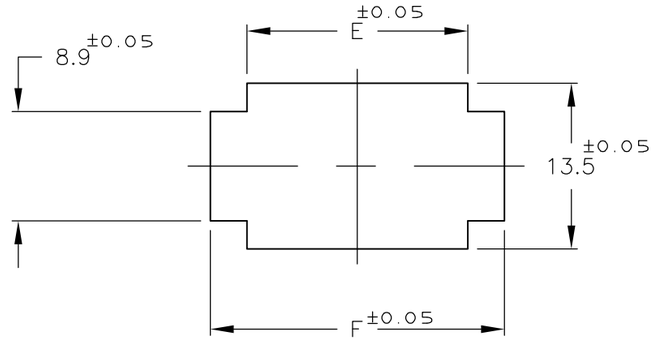

パネル加工推奨寸法図
RECOMMENDED PANEL LAYOUT
(適用パネル厚：0.8-2.0)
(APRICABLE PANEL THICKNESS:0.8-2.0)

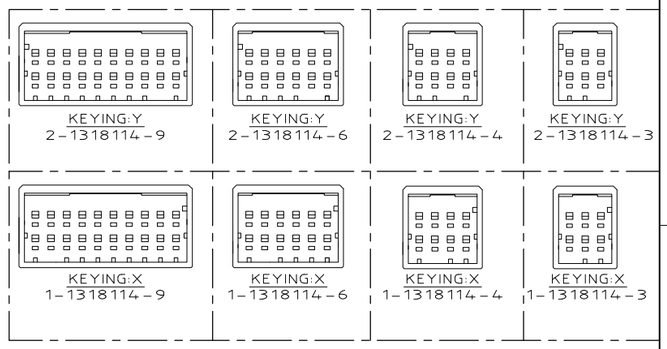

TOLERANCES UNLESS OTHERWISE SPECIFIED:
一般公差

	10 ≧	±0.3
30 ≧	>10	±0.35
100 ≧	>30	±0.4
	ANGLE	±3°

		A	B	C	D	E	F	G	N	POS	P/N
OBSOLETE	~~4~~	~~22.5~~	~~27.7~~	~~11.5~~	~~6~~	~~28~~	~~34.0~~	~~33.88~~	~~9~~	~~20~~	~~5-1318114-9~~
		22.5	27.7	11.5	6	28	34.0	33.88	9	20	2-1318114-9
	-	22.5	27.7	11.5	6	28	34.0	33.88	9	20	1-1318114-9
OBSOLETE	~~4~~	~~12.5~~	~~17.7~~	~~11.5~~	~~6~~	~~18~~	~~24.0~~	~~23.88~~	~~5~~	~~12~~	~~5-1318114-6~~
		12.5	17.7	11.5	6	18	24.0	23.88	5	12	2-1318114-6
	-	12.5	17.7	11.5	6	18	24.0	23.88	5	12	1-1318114-6
OBSOLETE	~~4~~	~~7.5~~	~~12.7~~	~~4~~	~~4~~	~~13~~	~~19.0~~	~~18.88~~	~~3~~	~~8~~	~~5-1318114-4~~
		7.5	12.7	4	4	13	19.0	18.88	3	8	2-1318114-4
	-	7.5	12.7	4	4	13	19.0	18.88	3	8	1-1318114-4
OBSOLETE	~~4~~	~~5~~	~~10.2~~	~~4~~	~~4~~	~~10.5~~	~~16.5~~	~~16.38~~	~~2~~	~~6~~	~~5-1318114-3~~
		5	10.2	4	4	10.5	16.5	16.38	2	6	2-1318114-3
	-	5	10.2	4	4	10.5	16.5	16.38	2	6	1-1318114-3
	FINISH	A	B	C	D	E	F	G	N	POS	P/N

THIS DRAWING IS A CONTROLLED DOCUMENT.

DIMENSIONS: mm

TOLERANCES UNLESS OTHERWISE SPECIFIED:
0 PLC ±-
1 PLC ±-
2 PLC ±-
3 PLC ±-
4 PLC ±-
ANGLES ±-

MATERIAL 1

FINISH

DWN	K.IKEDA	7/DEV/'98
CHK	N.MATSUBARA	7/DEC/'98
APVD	I.HASEGAWA	7/DECC/'98
PRODUCT SPEC	108-5619	
APPLICATION SPEC	114-5258	
WEIGHT	—	

TE Connectivity

NAME
2列 タブ ハウジング パネルマウント タイプ
DOUBLE ROW TAB (PANEL MOUNT)
DYNAMIC D2100D

SIZE	CAGE CODE	DRAWING NO	RESTRICTED TO
A3	00779	C-1318114	—

CUSTOMER DRAWING

SCALE	SHEET	REV
2:1	1 OF 1	B

Downloaded From Oneyac.com

ONEYAC 唯样商城 | 电子元器件线上授权代理开拓者
原厂授权 · 正品现货 · 一件即发

单击下面可查看定价，库存，交付和生命周期等信息

>>TE Connectivity(泰科)

Downloaded From Oneyac.com