THIS DRAWING IS UNPUBLISHED. RELEASED FOR PUBLICATION –,– .
© COPYRIGHT – By – ALL RIGHTS RESERVED.

LOC	DIST
FT	0

REVISIONS

P	LTR	DESCRIPTION	DATE	DWN	APVD
	P3	REVISED PER ECO–11–004587	11MAR11	RK	HMR

1 PARTS PACKAGED UNASSEMBLED.

2 CABLE CLAMPING AREA ADJUSTABLE FROM .100 TO .410 SQ IN BY REVERSING CLAMPING INSERTS. (2 INSERTS SUPPLIED, –1 AND –2 ONLY)

3 CABLE CLAMPING AREA ADJUSTABLE FROM .100 TO .410 SQ IN BY CHANGING CLAMPING INSERTS. (4 INSERTS SUPPLIED, –4 ONLY)

4 .703 MAXIMUM CABLE OUTSIDE DIAMETER.

5 BULK PACKAGED KITS TO BE ORDERED IN MULTIPLES OF 100 ONLY.

6 NON–HEXAVALENT CHROMATE FINISH.

7 OBSOLETE PARTS: OBSOLETE CIS STREAMLINING PER D.RENAUD/D.SINISI

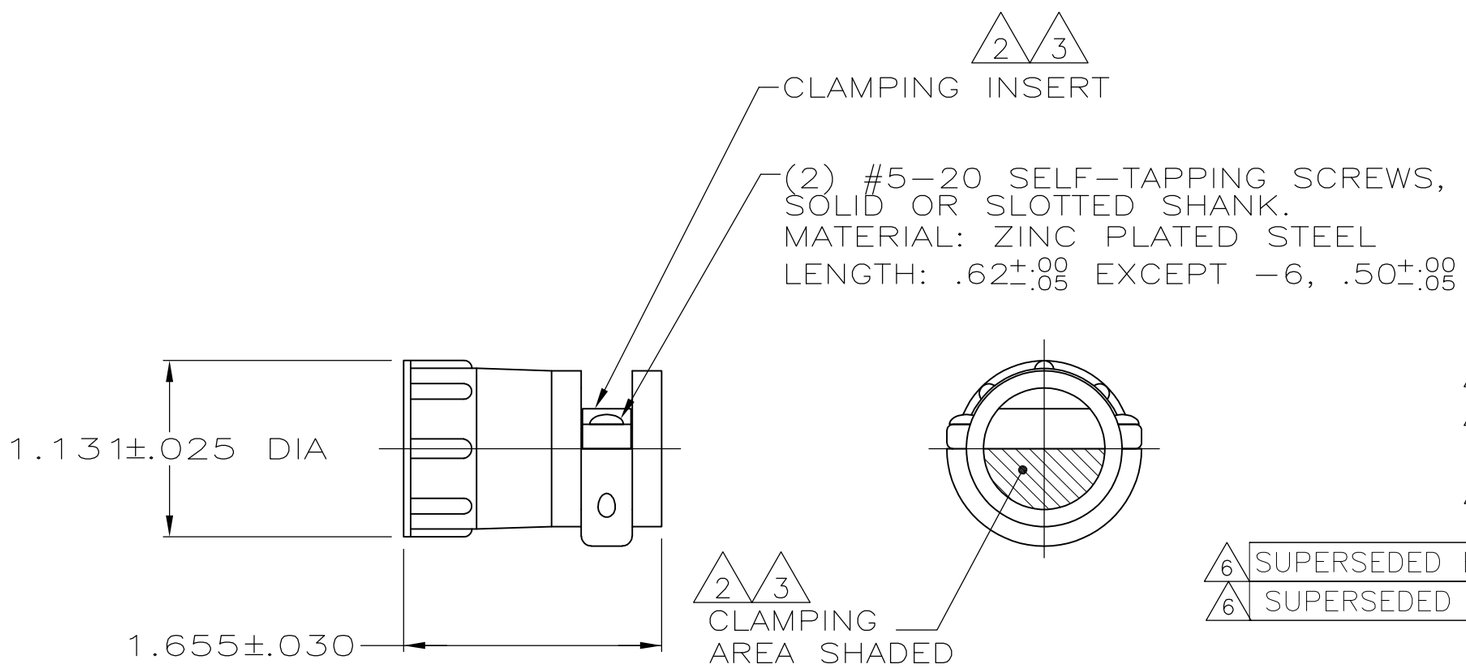

	PACKAGING	PART NUMBER
6	INDIVIDUAL	1–206322–1
6	5 BULK	1–206322–0
6	INDIVIDUAL	206322–9
6 7 OBSOLETE	~~SMALL PACK~~	~~206322–8~~
6 7 OBSOLETE	~~INDIVIDUAL~~	~~206322–7~~
6	5 BULK	206322–6
7 6 OBSOLETE	~~SMALL PACK~~	~~206322–5~~
OBSOLETE	~~INDIVIDUAL~~	~~206322–4~~
6 SUPERSEDED BY 1–206322–0	5 BULK	206322–2
6 SUPERSEDED BY 206322–9	INDIVIDUAL	206322–1

THIS DRAWING IS A CONTROLLED DOCUMENT.

DIMENSIONS: INCHES

TOLERANCES UNLESS OTHERWISE SPECIFIED:
0 PLC ± –
1 PLC ± –
2 PLC ± –
3 PLC ± –
4 PLC ± –
ANGLES ± –

MATERIAL: THERMOPLASTIC

FINISH: –

DWN A GRAFF 4/23/91
CHK W.G.LENKER 7–22–92
APVD – –
PRODUCT SPEC 108–10024
APPLICATION SPEC –
WEIGHT –

TE Connectivity

NAME: CABLE CLAMP KIT, LARGE, SHELL SIZE 17, CPC

SIZE	CAGE CODE	DRAWING NO	RESTRICTED TO
A3	00779	C–206322	–

CUSTOMER DRAWING

SCALE NTS | SHEET 1 OF 1 | REV P3

1470–19 (3/11)

Downloaded From Oneyac.com

ONEYAC 唯样商城 | 电子元器件线上授权代理开拓者
原厂授权 · 正品现货 · 一件即发

单击下面可查看定价，库存，交付和生命周期等信息

>>TE Connectivity(泰科)

Downloaded From Oneyac.com