~~THIS DRAWING IS UNPUBLISHED.~~ RELEASED FOR PUBLICATION 2004
© COPYRIGHT 2004 - ALL RIGHTS RESERVED.

LOC	DIST
1	-

REVISIONS

P	LTR	DESCRIPTION	DATE	DWN	APVD
	B3	REVISED PER ECO-11-005301	28MAR2011	RK	HMR
	B4	NEW PNs WITHOUT INTERLEAVE ADDED	20MAY2013	PKS	RRP
	C	PLATING INFO CORRECTED FOR 3- -2	17JUN2013	PKS	RRP
	C1	NEW PNs WITH NEW Q'TY ADDED	08APR2018	DT	TD

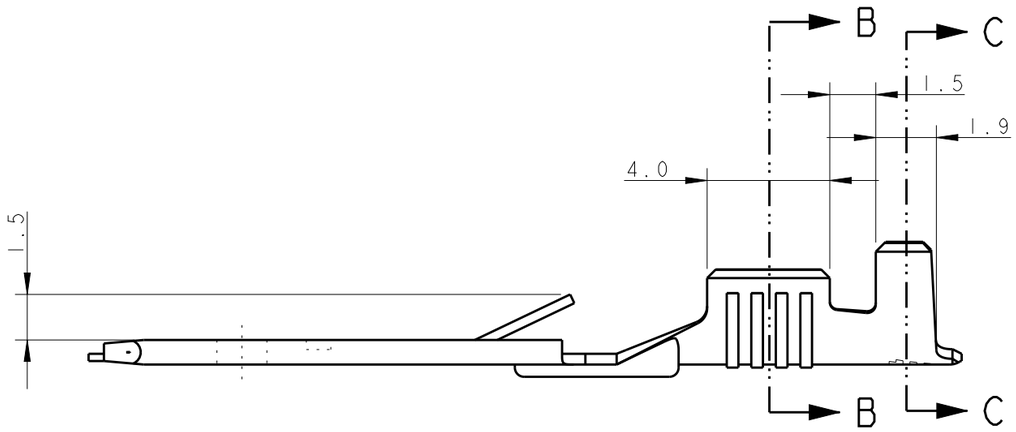

SECTION B-B

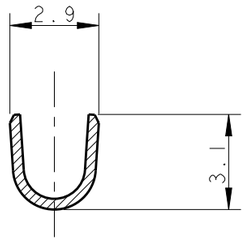

SECTION C-C

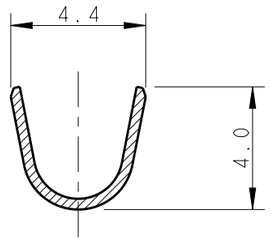

SECTION A-A

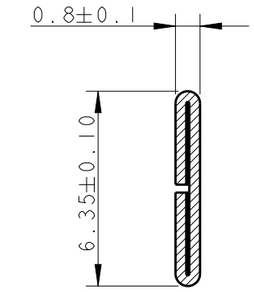

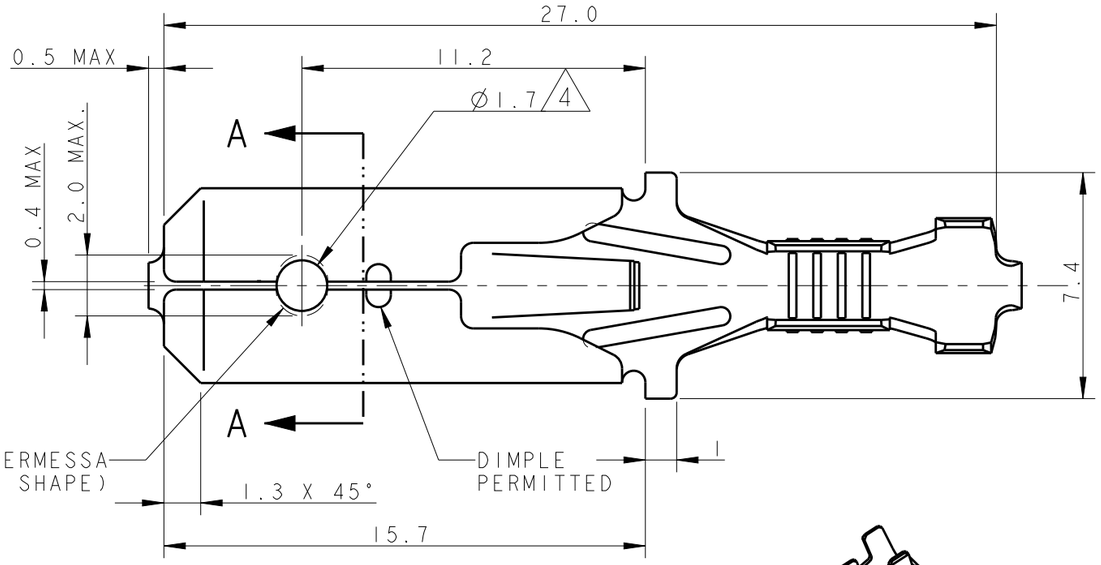

1) STATO DI FORNITURA
(SUPPLY CONDITION, Scala 1:1)

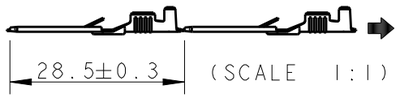

(SCALE 1:1)

SENSO DI USCITA
DEL TERMINALE
DALLA BOBINA
(DIRECTION OFF
TOP OF REEL)

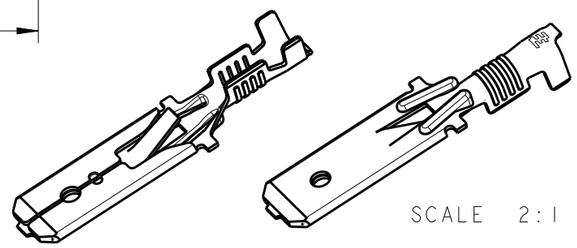

SCALE 2:1

2) BOBINATO SU BOBINA 12" CON
CARTA INTERPOSTA
(REELED ON 12" CARTON TYPE REEL WITH
INTERLEAVE PAPER STRIP)

3) SPLICING STRIP PRODUCT BY SPOT WELDING
PERMITTED

4 VERSIONI CON FORO (VERSION WITH HOLE)

5 REELED WITHOUT INTERLEAVE PAPER

6 NEW PNs WITH NEW Q'TY ADDED

NOTE (NOTES)	VERSIONI (VERSIONS)	FINITURA (FINISH)	MATERIALE (MATERIAL)	NUMERO (TE P/N)
	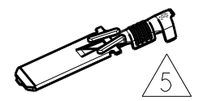 5	PRE-STAGNATO (PRE-TINNED)	OTTONE (BRASS)	3-293041-2
		NUDO (PLAIN)	OTTONE (BRASS)	3-293041-1
	4 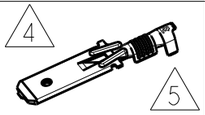 5	PRE-STAGNATO (PRE-TINNED)	OTTONE (BRASS)	2-293041-2
		NUDO (PLAIN)	OTTONE (BRASS)	2-293041-1
6		PRE-STAGNATO (PRE-TINNED)	OTTONE (BRASS)	7-293041-2
		PRE-STAGNATO (PRE-TINNED)	OTTONE (BRASS)	1-293041-2
		NUDO (PLAIN)	OTTONE (BRASS)	1-293041-1
6	4 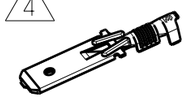	PRE-STAGNATO (PRE-TINNED)	OTTONE (BRASS)	6-293041-2
6		NUDO (PLAIN)	OTTONE (BRASS)	6-293041-1
		PRE-STAGNATO (PRE-TINNED)	OTTONE (BRASS)	0-293041-2
		NUDO (PLAIN)	OTTONE (BRASS)	0-293041-1

DIAM. ISOLANTE
(INS. DIA. RANGE)
Ø2.3 mm MAX

RANGO FILO
(WIRE RANGE)
0.35-1.00 mm²

THIS DRAWING IS A CONTROLLED DOCUMENT.

DIMENSIONS: mm

TOLERANCES UNLESS OTHERWISE SPECIFIED:

0 PLC	±-
1 PLC	±0.3
2 PLC	±-
3 PLC	±-
4 PLC	±-
ANGLES	±2°

MATERIAL SEE TABLE

FINISH SEE TABLE

DWN H. Yaali 04 JUL 2005
CHK G. Turco -
APVD -

PRODUCT SPEC 108-20020
APPLICATION SPEC 114-20119
WEIGHT -

TE Connectivity

NAME FASTIN-FASTON Connector, 6.3 mm SR. TAB CONTACT

SIZE	CAGE CODE	DRAWING NO	RESTRICTED TO
A3	00779	C-293041	-

Customer Drawing

SCALE 5:1 SHEET 1 OF 1 REV C1

1470-19 (3/11)

Downloaded From Oneyac.com

ONEYAC 唯样商城 | 电子元器件线上授权代理开拓者
原厂授权 · 正品现货 · 一件即发

单击下面可查看定价，库存，交付和生命周期等信息

>>TE Connectivity(泰科)

Downloaded From Oneyac.com