1: PARTS COMPLY WITH AMP SOLDERABILITY SPEC. NO. 109-11-3

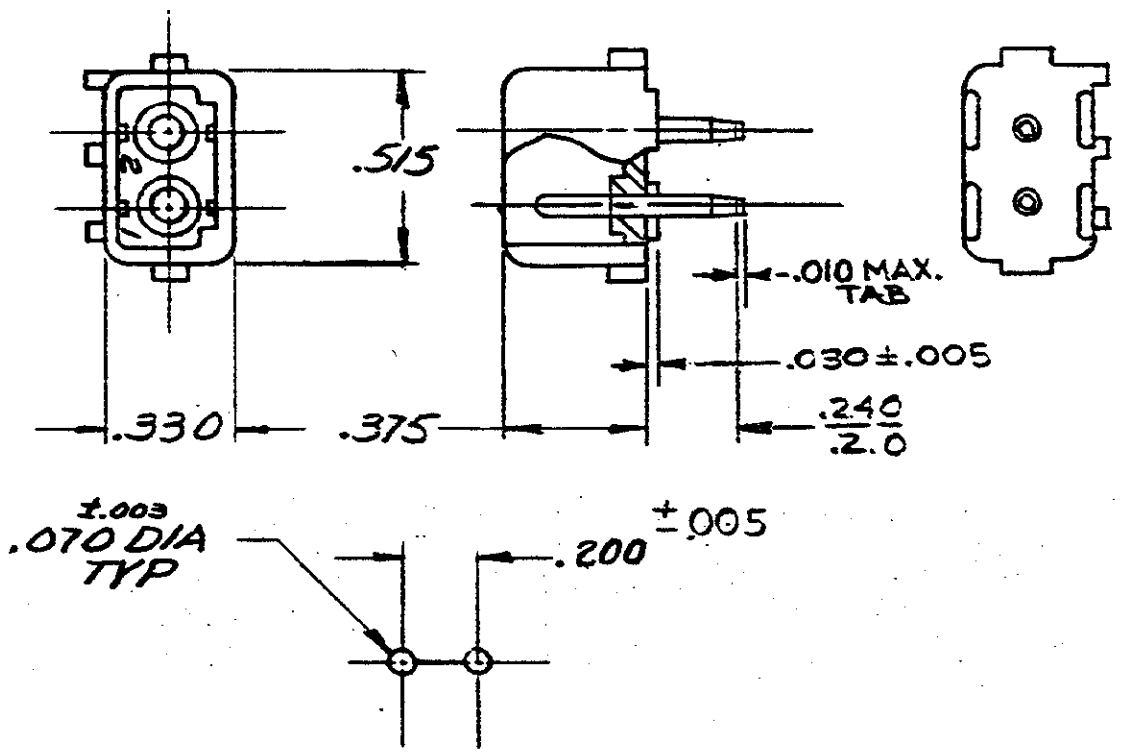

RECOMMENDED LAYOUT FOR .125 THICK P.C. BOARD

350422-1	NYLON - NAT.	ALLOY COPPER	PRE-TIN
ASSEMBLY NO.	HSG. MATL & COLOR	PIN MATL & FINISH	

© 1973 BY AMP INCORPORATED. ALL RIGHTS RESERVED.
AMP PRODUCTS COVERED BY PATENTS AND/OR PATENTS PENDING.

CUSTOMER COPY REFERENCE ONLY

LTR	REVISION RECORD	BY	CHK	DATE
J1	RESTORED	BXD	RS	4-1-85
J	REV. PER M-7375	SS	GM	8-27-85
H	.250 .200 WAS .250, M-7285	DAS	DH	8-11-85
G	ADDED NOTE 2, M-6694	MSF	DH	4-25-81
F	REV. TAIL LENGTH M-5334	MF	DH	5-24-77
E	REVISED M-4161	MF	DH	3-3-77
D	ECN M-3871	PEH	DH	9-4-76
C	ECN M-3452	GY	RS	7-18-76
B	ECN- M-3156	EQ	DRA	2-6-75
A	REDRAWN ADDED COLORS	PED	EMC	2-6-72

LTR	DESCRIPTION	DATE	CHK
L	OBSOLETE -2 PER ECN CM-2709	6-26-92	RS
K	OBSOLETE 1-1, 2-1, 3-1, 4-1, 5-1, 6-1, 7-1, 8-1, 9-1, 1-2, 2-2, 3-2, 4-2, 5-2, 6-2, 7-2, 8-2, 9-2 CM 473	4-12-86	KW / RS

NUMBER 350422

REQUIRED PER ASSEMBLY

DRAWN: G. Edmonson 6-21-73
CHK: E. Cramer 6-28-73
DIE: —
APP: [illegible]

MATERIAL AND FINISH: SEE TABLE

WIRE - RANGE - INSULATION: — | — | —

TOLERANCE EXCEPT AS NOTED: ±.015 ±1° 0'

SCALE: —

AMP INCORPORATED HARRISBURG, PENNA

CLASS: —

TYPE: —

LOC: CM | B | NO: 350422 | L

NAME: 2 CIRCUIT MATE-N-LOK P.C. BOARD HEADER

DIMENSIONS IN INCHES. DO NOT SCALE PRINT.

AP 1253 REV 11/65

Downloaded From Oneyac.com

ONEYAC 唯样商城 | 电子元器件线上授权代理开拓者
原厂授权 · 正品现货 · 一件即发

单击下面可查看定价，库存，交付和生命周期等信息

>>TE Connectivity(泰科)

Downloaded From Oneyac.com