1. PARTS COMPLY WITH TE SOLDERABILITY SPEC. NO. 109-11-3

2. CONTACT IS PLATED OVERALL WITH .000050 NICKEL, THEN .000030 GOLD OVER CONTACT LENGTH INDICATED AND TIN PLATED ON SOLDER TAIL END.

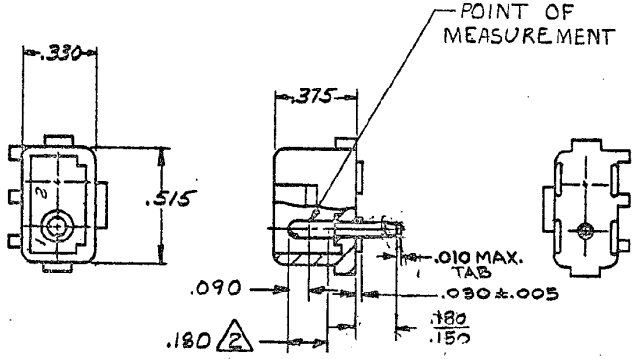

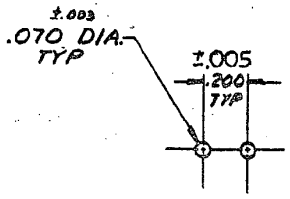

RECOMMENDED LAYOUT FOR .062 THICK P.C. BOARD

SUPERSEDED BY 1586530-2

	-2	NATURAL	GOLD 2
6-	-1	-BLUE	-PRE TIN
2-	-1	-RED	
350539-1		NYLON - NATURAL	COPPER ALLOY-PRE-TIN
ASSEMBLY NO.		HSG MATL & COLOR	PIN MATL & FINISH

REQUIRED PER ASSEMBLY

DESCRIPTION

©1973 BY AMP INCORPORATED. ALL RIGHTS RESERVED.
AMP PRODUCTS COVERED BY PATENTS AND/OR PATENTS PENDING.

CUSTOMER COPY REFERENCE ONLY

DR g. Edwards 3-29-73
CHK 4/9/73 EM Pettingill
DE J. Kunkle
APP J. Kunkle

MATERIAL AND FINISH: SEE TABLE

WIRE RANGE — INSULATION

TE Connectivity

CLASS: .084 DIA. PIN
TYPE: POSITIVE LOCK

DIMENSIONS ARE SHOWN AS NOTED ±.010 ±.0 of ±.0

SCALE —

LOC CM B NO 350539 REV N3

2 CIRCUIT MATE-N-LOK P.C. BOARD HEADER

NUMBER 350539

LTR	REVISION RECORD	DR	CHK	DATE
N3	REVISED PER ECR-18-008156	JB	DZ	19JUN2018
N2	REVISED PER ECR-13-008342	AV	RP	12NOV13
N1	REVISED PER ECO-11-005294	RK	HMR	08APR11

WAS P-73-6101

DIMENSIONS IN INCHES. DO NOT SCALE PRINT.

Downloaded From Oneyac.com

ONEYAC 唯样商城 | 电子元器件线上授权代理开拓者
原厂授权 · 正品现货 · 一件即发

单击下面可查看定价，库存，交付和生命周期等信息

>>TE Connectivity(泰科)

Downloaded From Oneyac.com