62

S

WAS P-73-6101

1. PARTS COMPLY WITH AMP SOLDERABILITY SPEC. NO. 109-11-3

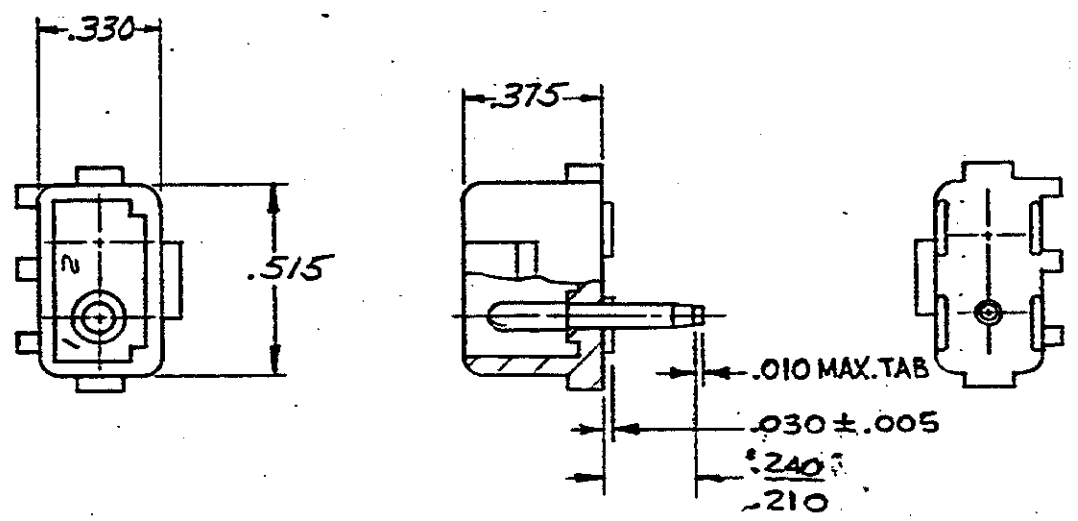

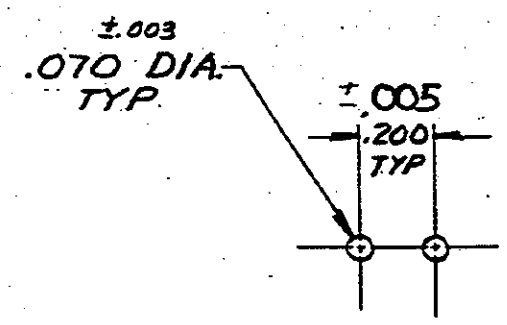

RECOMMENDED LAYOUT FOR .125 THICK P.C. BOARD

Unpublished copy not to be reproduced nor published without written permission of AMP Incorporated

L	OBSOLETE -2 PER ECN CM-2709	MJG		6-26-74	
K	OBSOLETE 1-1, 2-1, 3-1, 4-1, 5-1, 6-1, 7-1, 8-1, 9-1, 1-2, 2-2, 3-2, 4-2, 5-2, 6-2, 7-2, 8-2, 9-2 CM-4713	KW / RS		4-18-86	

LTR	REVISION RECORD	DR	CHK	DATE
J	RESTORED	BXD	RS	4/3/85
J	REV. PER M-7375	SJ	GM	8-29-83
H	.250 Cobur .250 Rep, M-7255	DMS	DH	3/11/83
G	ADDED NOTE 2, M-6694	MSF	DH	11-2-81
F	REMOVED STICKER, M-6543	MSF	DH	8-17-81
E	REV. TAIL LENGTH M-5334	MSF	DH	6-29-79
D	REVISED M-4161	MF	DH	3-2-77
C	ECN M-3871	BRH	DH	9-76
B	ECN M-3452	GT	REF	5/18/76
A	ECN M-2156	EL	DH	[illegible]

NUMBER 350540

REQUIRED PER ASSEMBLY

DESCRIPTION

350540-1	NYLON - NATURAL	COPPER ALLOY PRE-TIN
ASSEMBLY NO.	HSG MATL & COLOR	PIN MATL & FINISH

© 1973 BY AMP INCORPORATED. ALL RIGHTS RESERVED.
AMP PRODUCTS COVERED BY PATENTS AND/OR PATENTS PENDING.

CUSTOMER COPY REFERENCE ONLY

DR g. Eckman 3-29-73
CHK CM Pettenwadge 4/9/73
DE [illegible] 4-10-73
APP [illegible] 4-10-73

MATERIAL AND FINISH: SEE TABLE

AMP INCORPORATED HARRISBURG, PENNA

CLASS .084 DIA. PIN

TYPE POSITIVE LOCK

WIRE # — RANGE — INSULATION #

TOLERANCE EXCEPT AS NOTED ±.015 ±1° 0'

SCALE #

LOC CM B NO 350540 REV L

NAME 2 CIRCUIT MATE-N-LOK P.C. BOARD HEADER

DIMENSIONS IN INCHES. DO NOT SCALE PRINT.

PRINT NO. 53

AMP 1253 REV 11/65

Downloaded From Oneyac.com

ONEYAC 唯样商城 | 电子元器件线上授权代理开拓者
原厂授权 · 正品现货 · 一件即发

单击下面可查看定价，库存，交付和生命周期等信息

>>TE Connectivity(泰科)

Downloaded From Oneyac.com