NUMBER 480722

WAS P-72-6952

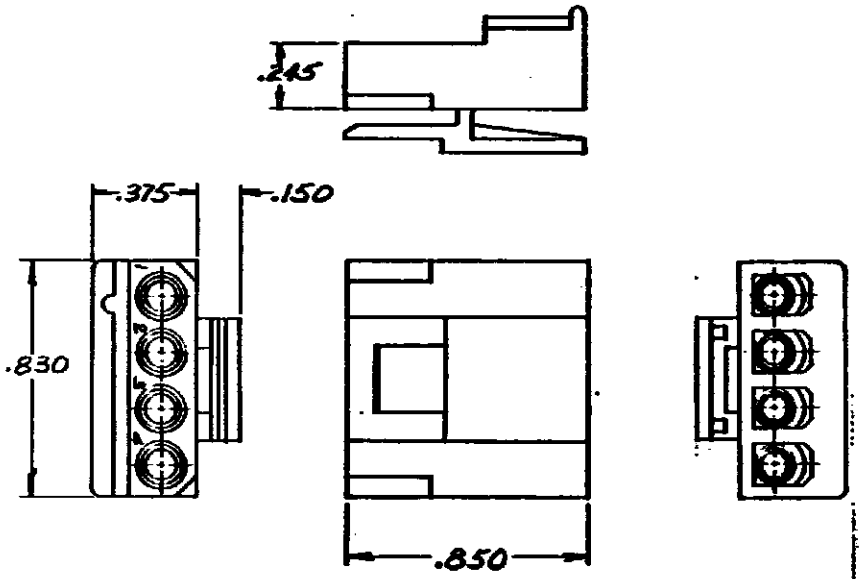

1. MATES WITH HEADER 350543, 350544.
2. TO BE USED WITH MATE-N-LOK SOCKETS.

1-480722-0	NYLON	NATURAL
HOUSING	MATL	COLOR

DIMENSIONS IN INCHES. DO NOT SCALE PRINT

LTR	REVISION RECORD			DATE
B	OBSOLETED -1/-9 PER CM-473	PJB	RS	7/21/86
A1	RESTORED		RS	8-7-85
A	RELEASED			4/12/73

DR 9. Ed. 4-2-73 DE 4-12-73
CHK 4/13/73 APP 4-12-73

©1973 BY AMP INCORPORATED. ALL RIGHTS RESERVED. AMP PRODUCTS COVERED BY PATENTS AND/OR PATENTS PENDING

CUSTOMER COPY REFERENCE ONLY

MATERIAL AND FINISH: SEE TABLE

AMP INCORPORATED HARRISBURG PENNA

CLASS .034 SOCKET HOUSING

WIRE — RANGE — INSULATION

TYPE P.C. BOARD PLUG

TOLERANCE EXCEPT AS NOTED ± .010 ± 1° 0'

SCALE NTS

CM A NO 480722 REV B

NAME HOUSING, PLUG 4 CIRCUIT MATE-N-LOK

AMP 1252 REV 2 68

Downloaded From Oneyac.com

ONEYAC 唯样商城 | 电子元器件线上授权代理开拓者
原厂授权 · 正品现货 · 一件即发

单击下面可查看定价，库存，交付和生命周期等信息

>>TE Connectivity(泰科)

Downloaded From Oneyac.com