THIS DRAWING IS UNPUBLISHED. RELEASED FOR PUBLICATION -.- .
© COPYRIGHT - By - ALL RIGHTS RESERVED.

REVISIONS					
P	LTR	DESCRIPTION	DATE	DWN	APVD
	H2	REVISED PER ECR-18-005392	27NOV2018	BDA	SG

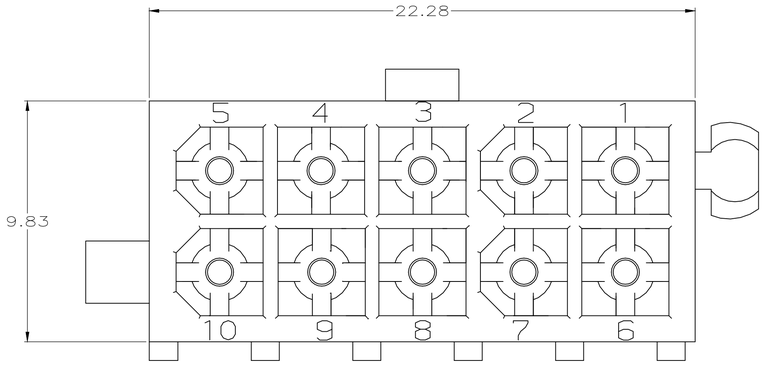

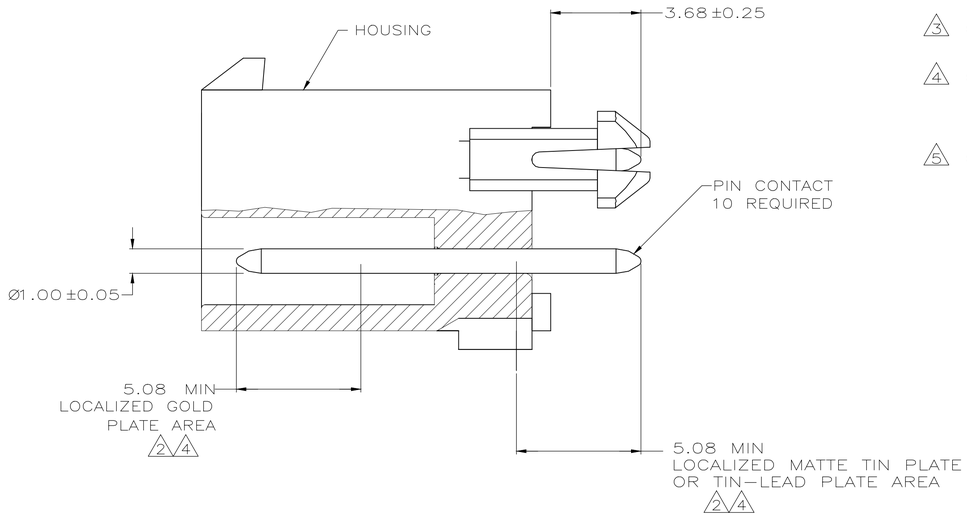

1. PINS TO COMPLY WITH AMP SOLDERABILITY SPEC 109-11-3.

2. 0.00076 MIN GOLD PLATE IN THE LOCALIZED PLATE AREA, 0.00381 MATTE TIN LEAD IN THE LOCALIZED PLATE AREA, BOTH OVER 0.00127 MIN NICKEL.

3. 0.00381 MIN MATTE TIN LEAD PLATE OVER 0.00127 MIN NICKEL.

4. 0.00076 MIN GOLD PLATE IN THE LOCALIZED PLATE AREA, 0.00381 MATTE TIN IN THE LOCALIZED PLATE AREA, BOTH OVER 0.00127 MIN NICKEL.

5. 0.00381 MIN MATTE TIN PLATE OVER 0.00127 MIN NICKEL.

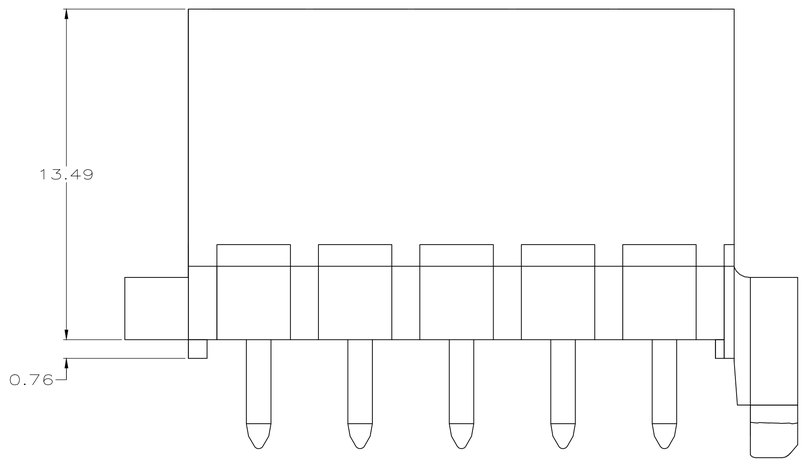

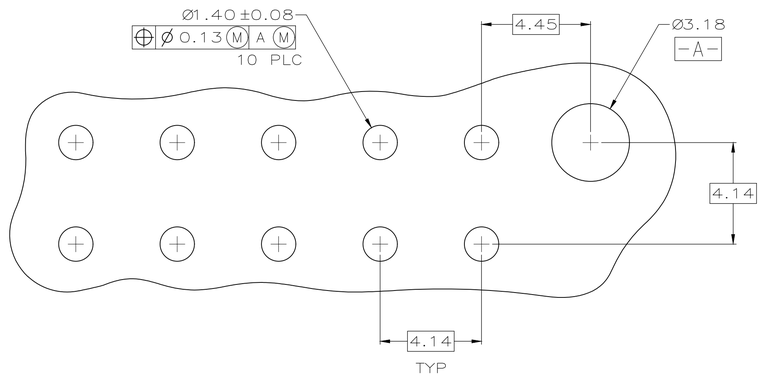

RECOMMENDED MOUNTING HOLE PATTERN
FOR 1.57 THICK P.C. BOARD

	PIN CONTACT MATERIAL AND FINISH	HOUSING MATERIAL AND COLOR	PART NO.
	BRASS, GOLD 4	NYLON, 94V-0, WHITE	1-770858-1
	BRASS, TIN 5	NYLON, 94V-0, WHITE	1-770858-0
OBSOLETE	BRASS, GOLD 2	NYLON, 94V-0, WHITE	~~770858-2~~
	BRASS, TIN LEAD 3	NYLON, 94V-0, WHITE	~~770858-1~~

THIS DRAWING IS A CONTROLLED DOCUMENT.

DIMENSIONS: mm

TOLERANCES UNLESS OTHERWISE SPECIFIED:
0 PLC ± -
1 PLC ± -
2 PLC ± -
3 PLC ± 0.13
4 PLC ± -
ANGLES ± -

MATERIAL: SEE TABLE
FINISH: SEE TABLE

DWN: C. MARTIN 8-2-91
CHK: R. SWING 8-2-91
APVD: -
PRODUCT SPEC: -
APPLICATION SPEC: -
WEIGHT: 0.000000
CUSTOMER DRAWING

TE Connectivity

NAME: HDR ASSY, CLOSED BOTTOM 10 CRT DBLE ROW VERTICAL MINI UNIVERSAL MATE-N-LOK

SIZE	CAGE CODE	DRAWING NO	RESTRICTED TO
A1	00779	C-770858	-

SCALE 8:1 SHEET 1 OF 1 REV H2

4805 (1/15)

Downloaded From Oneyac.com

ONEYAC 唯样商城 | 电子元器件线上授权代理开拓者
原厂授权 · 正品现货 · 一件即发

单击下面可查看定价，库存，交付和生命周期等信息

>>TE Connectivity(泰科)

Downloaded From Oneyac.com