DRAWING MADE IN THIRD ANGLE PROJECTION
THIS DRAWING IS UNPUBLISHED. RELEASED FOR PUBLICATION ,19 .
© COPYRIGHT 19 BY AMP INCORPORATED. ALL INTERNATIONAL RIGHTS RESERVED.

LOC	DIST
AD	25

REVISIONS

P	F	ZONE	LTR	DESCRIPTION	DATE	APPD
			O	DRAWN	-	–
			A	EC 0010-1152-95	10/10/95	LSB
			B	REVISED PER 0503-0580-97	9-30-97	JG
			C	PER EC 0G20-0147-98 T.S.	6-4-98	CR
			D	REV PER EC 0U1B-0136-99	06 OCT 99	CR

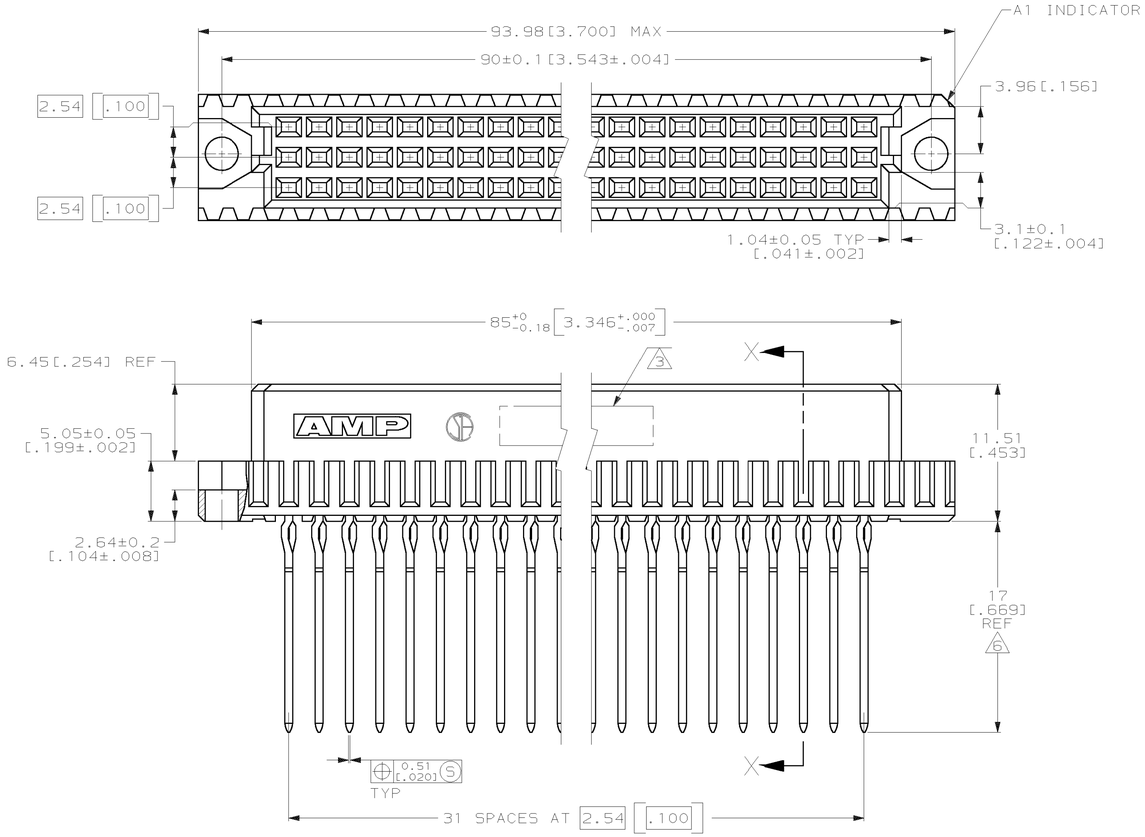

1. HOUSING MATERIAL: GLASS-FILLED POLYESTER. COLOR: GRAY.
2. CONTACT MATERIAL: PHOSPHOR BRONZE.
3. PART NUMBER AND DATE CODE HOT STAMPED IN THIS APPROXIMATE AREA.
4. ACTION PIN POSTS REQUIRE 1.57[.062] MINIMUM THICK PC BOARD. RECOMMENDED PC BOARD DRILLED HOLES ARE 1.15±0.025[.0453±.0010] DIAMETER WITH 0.02-0.08[.001-.003] COPPER AND 0.008[.0003] MINIMUM TIN-LEAD PLATING. FINISHED HOLE AFTER PLATING IS 1.02±0.08[.040±.002] DIAMETER.
5. CONTACT FINISH: DIN 41612 CLASS 2 IN CONTACT AREA. TIN-LEAD PLATE ON POSTS.
6. TAIL LENGTH AFTER SEATING IN PC BOARD.
7. CONTACT FINISH: DIN 41612 CLASS 2 IN CONTACT AREA AND LAST 5.08[.200] OF POST.
8. CONTACT POINT AFTER SEATED IN PC BOARD.
9. HOT STAMPING ON THIS SIDE.

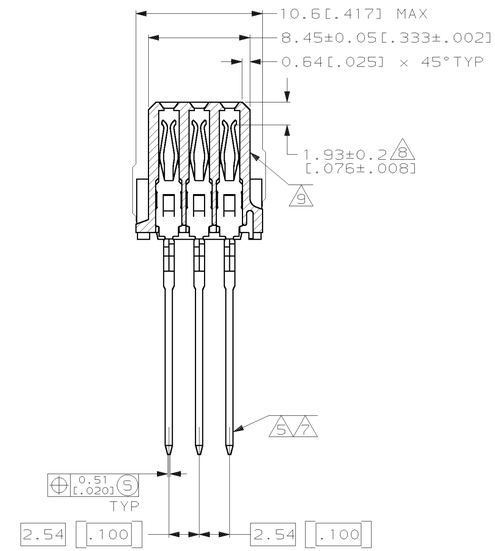

SECTION X-X

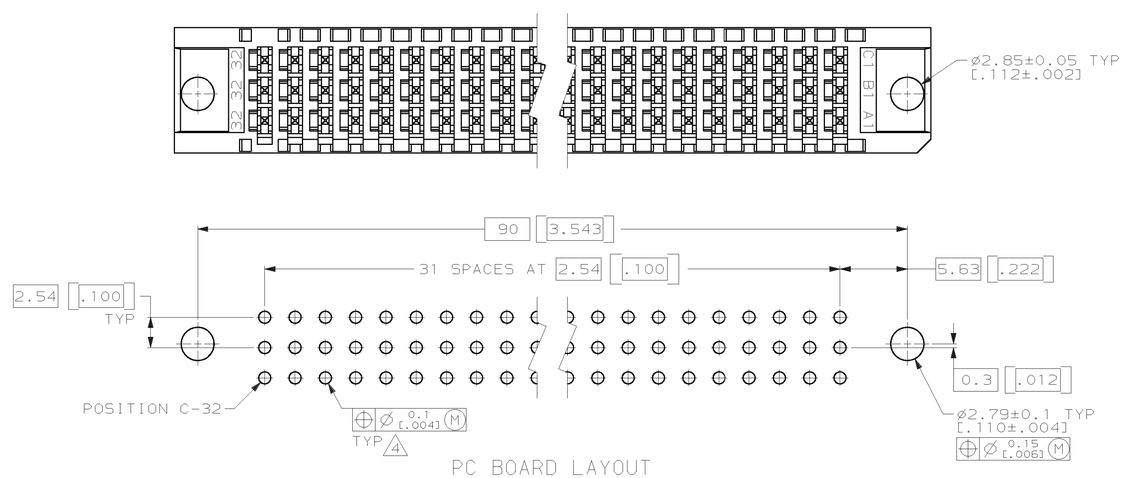

PC BOARD LAYOUT

7	1-148059-5
5	148059-5
FINISH	PART NO

DO NOT SCALE PRINT.
UNLESS SPECIFIED
DIMENSIONS IN mm [INCHES]
TOLERANCES ON :
2 PLC DEC ±0.13[.005]
3 PLC DEC ±-
ANGLES ±-

MATERIAL
HOUSING: 1
CONTACTS: 2

FINISH
CONTACTS: 5

DR	L. BRINER	7/26/94
CHK	R. PATTERSON	8/9/94
APPD	R. PATTERSON	8/9/94
APPD	R. PATTERSON	8/9/94

PRODUCT SPEC
–

APPLICATION SPEC
–

WEIGHT –

AMP Incorporated
Harrisburg, PA 17105-3608

NAME
RECEPTACLE ASSEMBLY, EUROCARD, TYPE "C"

SIZE	CAGE CODE	DRAWING NO
D	00779	C-148059
SCALE 4:1		SHEET 1 OF 1

THIS DRAWING IS A CONTROLLED DOCUMENT FOR AMP INCORPORATED. IT IS SUBJECT TO CHANGE AND THE CONTROLLING ENGINEERING ORGANIZATION SHOULD BE CONTACTED FOR THE LATEST REVISION.

CUSTOMER DRAWING

Downloaded From Oneyac.com

单击下面可查看定价，库存，交付和生命周期等信息

>>TE Connectivity(泰科)

Downloaded From Oneyac.com