THIS DRAWING IS UNPUBLISHED. RELEASED FOR PUBLICATION -,- .
© COPYRIGHT - BY TYCO ELECTRONICS CORPORATION. ALL RIGHTS RESERVED.

LOC	DIST
DF	FO

REVISIONS

P	LTR	DESCRIPTION	DATE	DWN	APVD
	C	REV PER ECO 10-002921	23MAR10	PY	DM

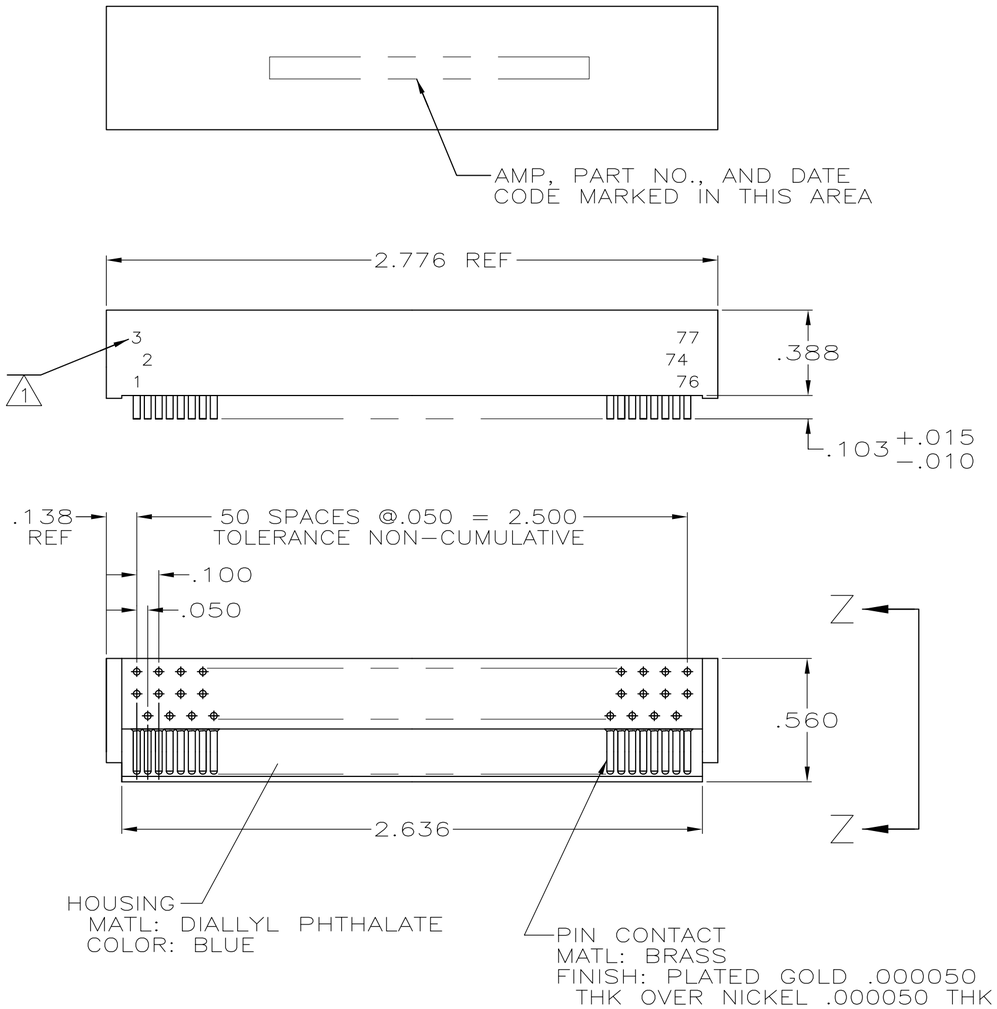

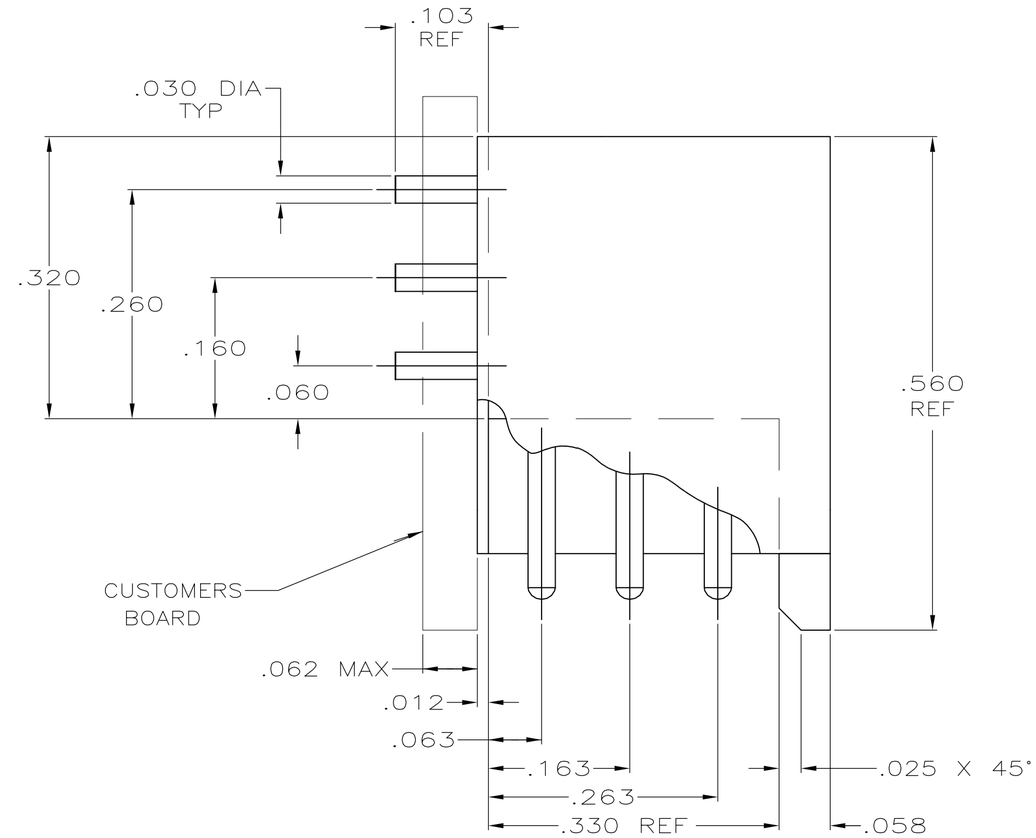

VIEW Z-Z
SCALE 8:1

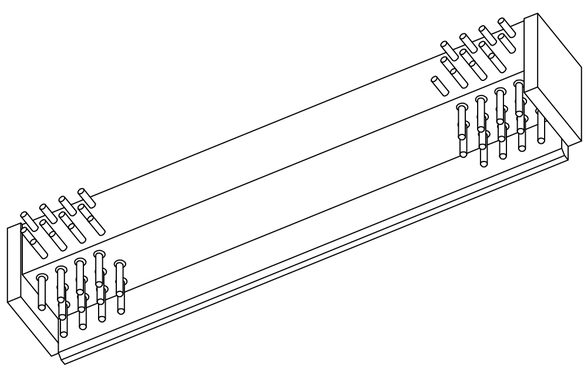

1 PIN IDENTIFICATION CORRESPONDING TO END PIN IN EACH ROW OF MATING FACE. MARKING TO BE DONE ON BACK FACE OF BLOCK AS INDICATED.

77	445397-1
NO OF POSN	PART NUMBER

THIS DRAWING IS A CONTROLLED DOCUMENT.

DIMENSIONS: INCHES

TOLERANCES UNLESS OTHERWISE SPECIFIED:
0 PLC ± -
1 PLC ± -
2 PLC ± -
3 PLC ± .005
4 PLC ± -
ANGLES ± -

MATERIAL: SEE CALLOUTS
FINISH: SEE CALLOUTS

DWN C.C.THOMAS 2-28-08
CHK J.WEAVER 2-28-08
APVD J.WEAVER 2-28-08
PRODUCT SPEC —
APPLICATION SPEC —
WEIGHT —

Tyco Electronics
Tyco Electronics Corporation
Harrisburg, PA 17105-3608

NAME: PIN HEADER ASSEMBLY, 1000 SERIES BOX, MOLDED

SIZE	CAGE CODE	DRAWING NO	RESTRICTED TO
A2	00779	C-445397	—

CUSTOMER DRAWING | SCALE 2:1 | SHEET 1 OF 1 | REV C

445397

AMP 1471-9 REV 31MAR2000

Downloaded From Oneyac.com

单击下面可查看定价，库存，交付和生命周期等信息

>>TE Connectivity(泰科)

Downloaded From Oneyac.com