THIS DRAWING IS UNPUBLISHED. RELEASED FOR PUBLICATION -,- .
© COPYRIGHT - BY TYCO ELECTRONICS CORPORATION. ALL RIGHTS RESERVED.

LOC	DIST
ES	00

REVISIONS

P	LTR	DESCRIPTION	DATE	DWN	APVD
	B	RELEASED ECR-10-010197	17JUN11	T.Q	S.Y

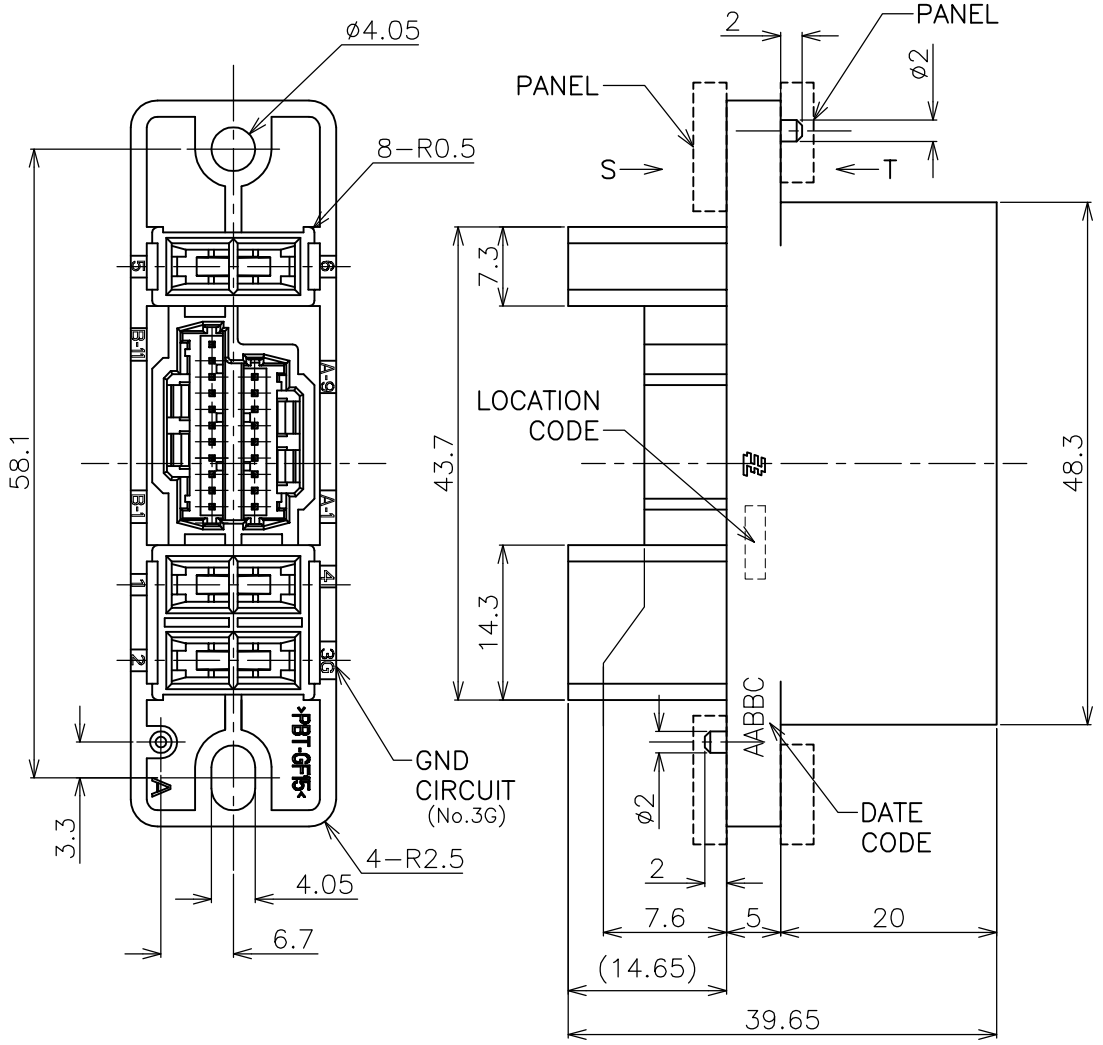

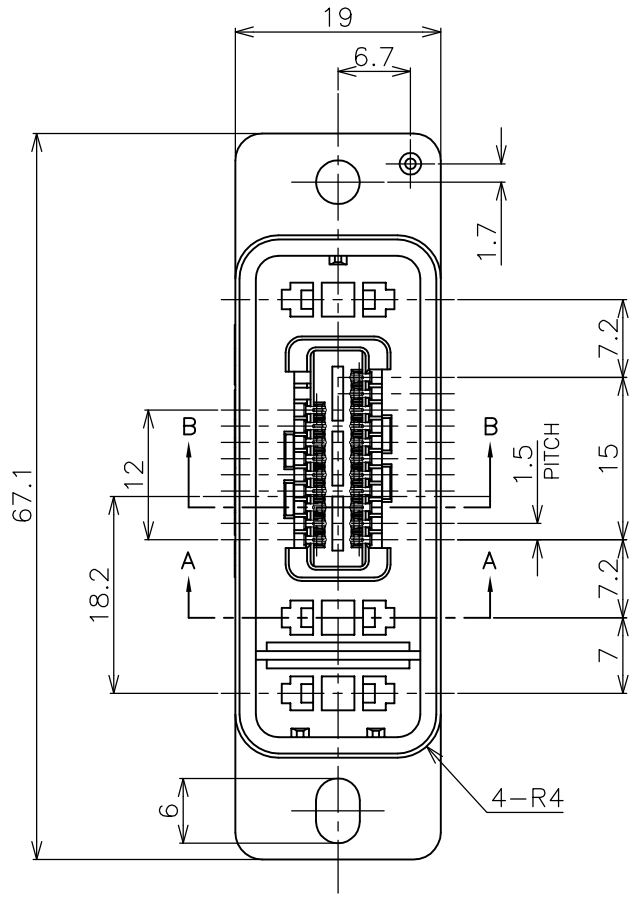

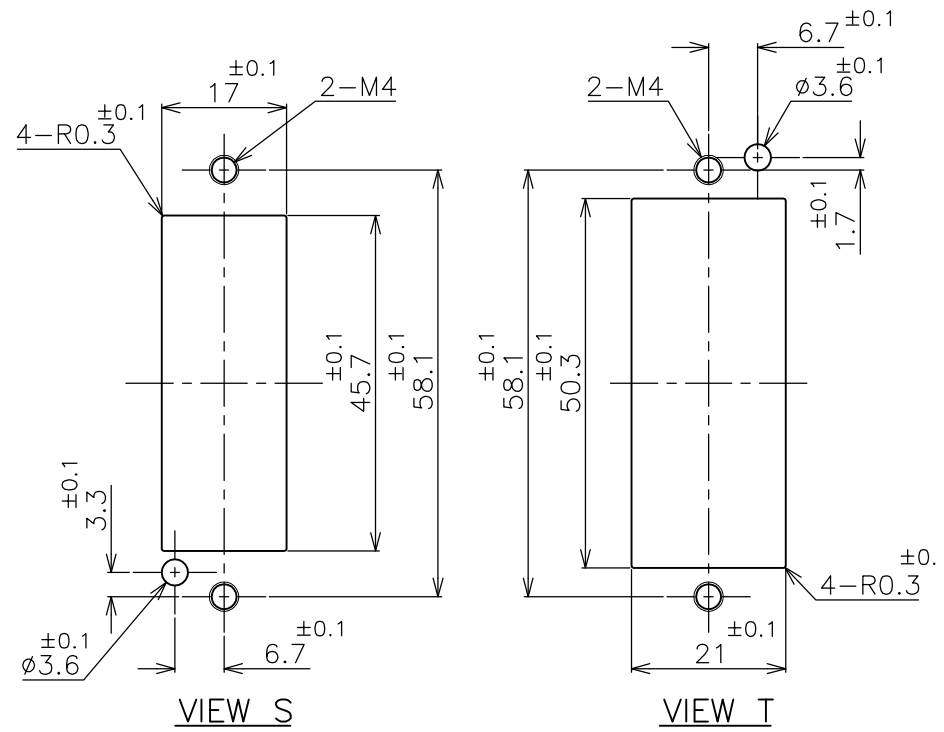

PANEL CUT DIMENSIONS
(CONNECTOR MATING SIDE)

NOTE;
1.USE WITH:MT REC CONN P/N: X-353293-X
CRIMP HSG P/N: X-353908-X
CRIMP CONT P/N: 353907-1
353918-1(L/P)

2. APPRICABLE POWER CONTACT P/N

FINISH	AWG	STRIP
GOLD PL. & TIN PL.	#16-20	0-179321-3
	#20-24	0-179322-3
ALL TIN PL.	#16-20	1-179321-2
	#20-24	1-179322-2

3 MATERIAL;
HOUSING : PBT G.F. UL94V-0 COLOR:BLACK
SIGNAL CONTACT : PHOSPHOR BRONZE

4 CONTACT FINISH;
DRAWER CONTACT AREA : NICKEL PL. ALL OVER GOLD PL.
POST AREA : NICKEL PL. ALL OVER TIN PL.

5 P : NUMBER OF POWER CONTACT (UNASSEMBLED)
S : NUMBER OF SIGNAL CONTACT (ASSEMBLED)

6. COUNTER MATING CONNECTOR P/N : 2-292377-0

7 FLOATING DIMENSION : ±1.0 MAX
(INCLUDE THE AMOUNT OF AXIAL GAPS)

8 GENERAL TOLERANCE
10>= : ±0.2
30>= >10: ±0.25
100>= >30: ±0.3
ANGLES: ±3°

6-20	2-292376-0
POS. 5 (P-S)	P/N

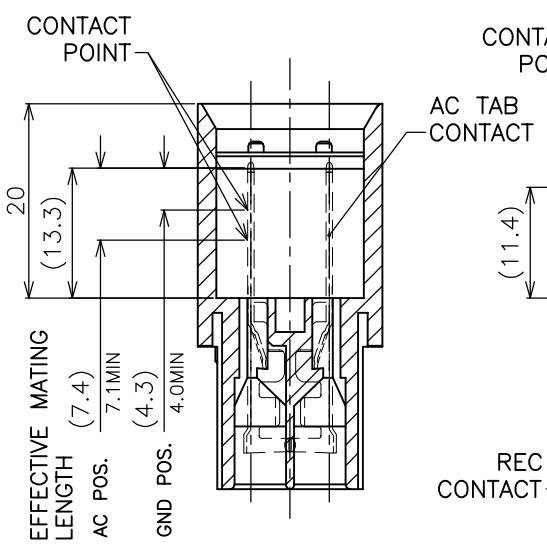

SECT A-A

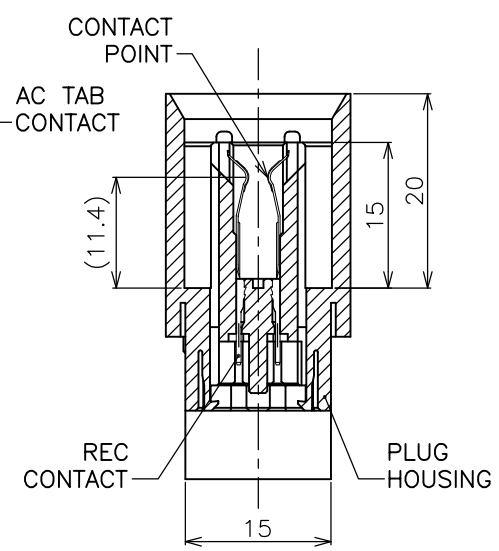

SECT B-B

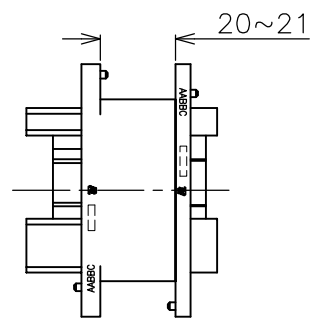

DIMENSION BETWEEN PANELS

THIS DRAWING IS A CONTROLLED DOCUMENT.

DIMENSIONS: mm

TOLERANCES UNLESS OTHERWISE SPECIFIED:
0 PLC ±-
1 PLC ±-
2 PLC ±-
3 PLC ±-
4 PLC ±-
ANGLES ±-
8

MATERIAL 3

FINISH 4

DWN	Julyee Zhu	09NOV04
CHK	Steven Yao	09NOV04
APVD	Ikuo Enomoto	09NOV04
PRODUCT SPEC	108-5882	
APPLICATION SPEC		
WEIGHT	23.1g	

CUSTOMER DRAWING

TE Connectivity

NAME
PLUG ASSEMBLY
MINI CT HYBRID DRAWER CONNECTOR
AC6DC20 TYPE

SIZE	CAGE CODE	DRAWING NO	RESTRICTED TO
A3	00779	C-292376	

SCALE	SHEET	REV
NTS	1 OF 1	B

AMP 1470-19 REV 31MAR2000

Downloaded From Oneyac.com

单击下面可查看定价，库存，交付和生命周期等信息

>>TE Connectivity(泰科)

Downloaded From Oneyac.com