THIS DRAWING IS UNPUBLISHED. RELEASED FOR PUBLICATION - ,19- .
© COPYRIGHT 1996 BY AMP INCORPORATED. ALL RIGHTS RESERVED.

LOC	DIST
AI	–

E96-52 584

REVISIONS

P	LTR	DESCRIPTION	DATE	DWN	APVD
	0	ZEICHNUNG FREIGEGEBEN	17.06.1996	TILLE	–
	A1	AUSFÜHRUNG -2 HINZU	18.03.1997	TILLE	–

NOT SPECIFIED DIMENSIONS SEE -1
FEHLENDE MASSE SIEHE AUSFÜHRUNG -1

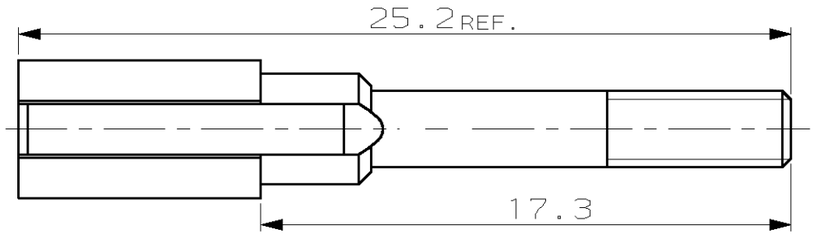

VERSION: / AUSFÜHRUNG: 966 965-2

M5:1

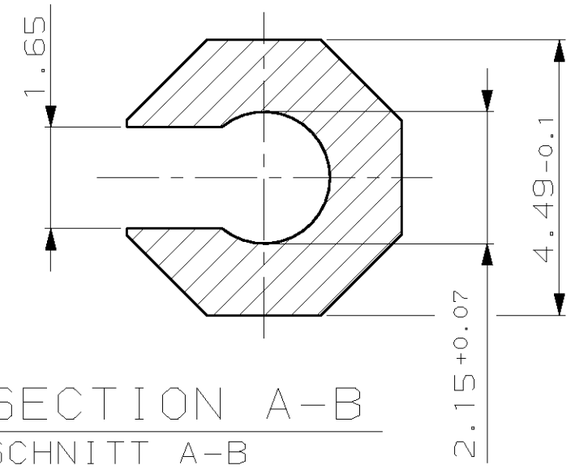

SECTION A-B
SCHNITT A-B

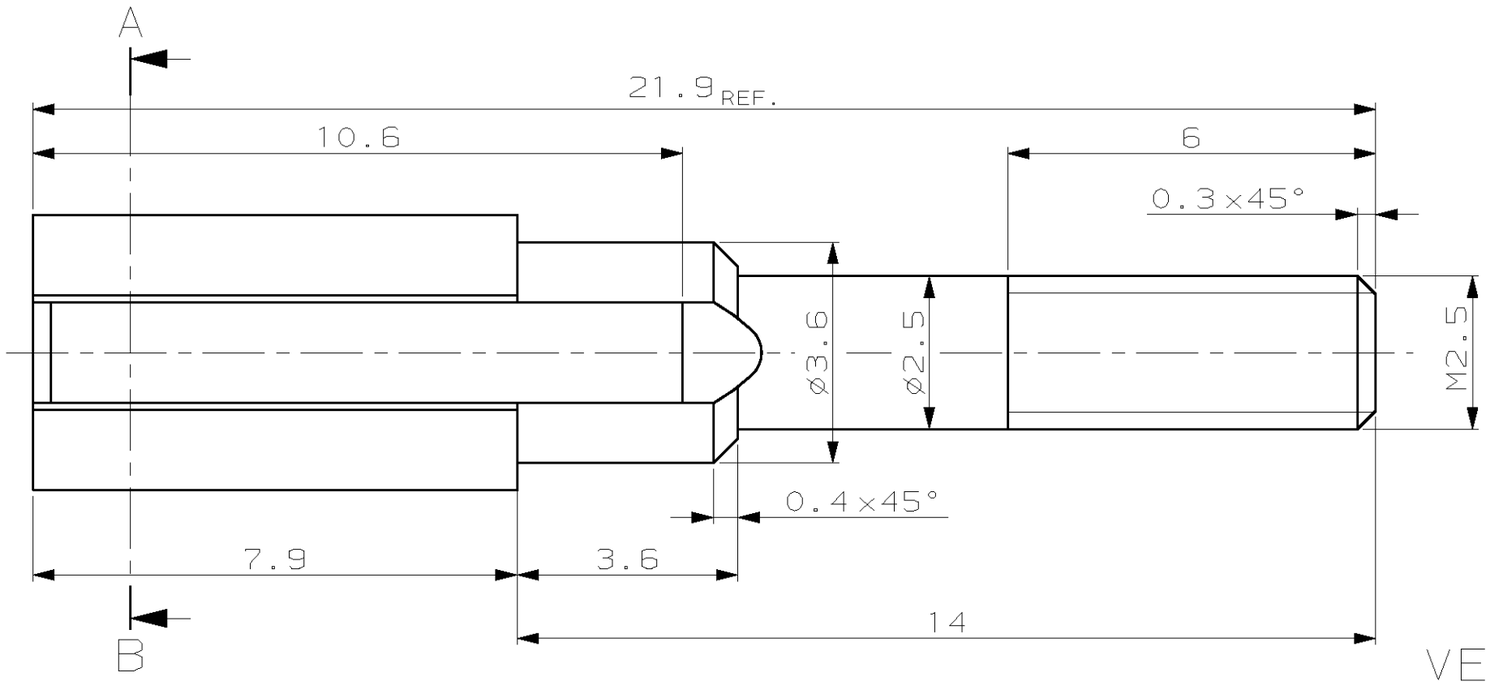

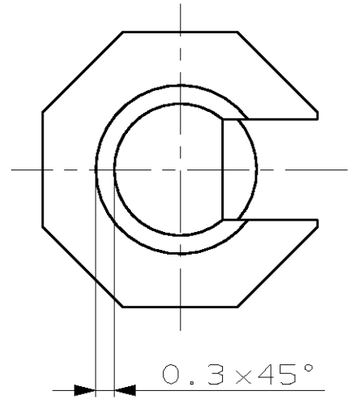

VERSION: / AUSFÜHRUNG: 966 965-1

ALCATEL ORDER NO. BESTELL-NR.	AMP ORDER NO. BESTELL-NR.	POS.	QTY STÜCK	DESCRIPTION BENENNUNG EINZELTEIL	MATERIAL WERKSTOFF	FINISH OBERFLÄCHE
1AB 01293 0002	966 965-2	1	1	CODING SCREW KODIERSCHRAUBE	STAINLESS STEEL	PLAIN
1AB 01293 0001	966 965-1	1	1	CODING SCREW KODIERSCHRAUBE	NICHTROSTENDER STAHL	BLANK

THIS DRAWING IS A CONTROLLED DOCUMENT FOR AMP INCORPORATED. IT IS SUBJECT TO CHANGE AND THE CONTROLLING ENGINEERING ORGANIZATION SHOULD BE CONTACTED FOR THE LATEST REVISION.

DIMENSIONS: mm

TOLERANCES UNLESS OTHERWISE SPECIFIED:
n. ISO 2768 - mH -E
~~n. DIN 16901 - 1-4Q~~
0 PLC ±0.1
1 PLC ±0.1
2 PLC ±-
3 PLC ±-
ANGLES ±-

MATERIAL –
FINISH –

DWN	W. TILLE	17-JUN-96
CHK	R. KRÄMER	17-JUN-96
APVD	G. FELDMEIER	17-JUN-96
PRODUCT SPEC	–	
APPLICATION SPEC	–	
WEIGHT	–	

AMP
AMP Deutschland GmbH
D - 63225 Langen

NAME
CODING SCREW
KODIERSCHRAUBE

SIZE	CAGE CODE	DRAWING NO	RESTRICTED TO
A3	00779	C-966965	–

CUSTOMER DRAWING

SCALE 10:1 (5:1) SHEET 1 OF 1 REV A1

AMP1470-19 REV 10/93

Downloaded From Oneyac.com

18-MAR-97 11:47:50 wt5200 /home/wt5200/edmmod

单击下面可查看定价，库存，交付和生命周期等信息

>>TE Connectivity(泰科)

Downloaded From Oneyac.com