© – TE Connectivity. All Rights Reserved.

REVISIONS					
P	LTR	DESCRIPTION	DATE	DWN	APVD
	C3	ECO-18-014918	29AUG2020	RR	SH

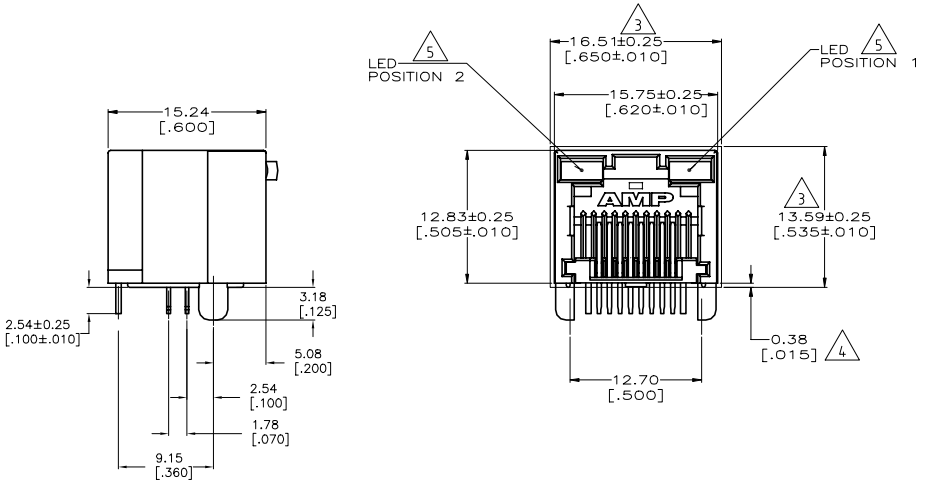

1. MATERIAL:
   HOUSING – HIGH TEMPERATURE THERMOPLASTIC, BLACK, UL94V-0.
   TERMINALS – 0.36[.014] THICK PHOS BRONZE PLATED WITH 3.81μm[.000150] MINIMUM THICK BRIGHT TIN LEAD IN SOLDER AREA. 1.27μm [.000050] MINIMUM GOLD IN LOCALIZED PLATE AREA. ENTIRE TERMINAL PLATED WITH 1.27μm [.000050] MINIMUM THICK NICKEL.
   LIGHT EMITTING DIODE (LED) – DIFFUSED EPOXY LENS, 0.51 x 0.51[.020 x .020] CARBON STEEL WIREFRAME LEADS PLATED WITH 8.89μm[.000350] TIN/COPPER OVER 2.03μm[.000080] SILVER OVER 1.02μm[.000040] NICKEL UNDERPLATE OVER 2.03μm[.000080] COPPER UNDERPLATE.
2. JACK CAVITY CONFORMS TO FCC RULES AND REGULATIIONS PART 68, SUBPART F.

3 SUGGESTED PANEL OPENING DIMENSIONS.

4 SUGGESTED CLEARANCE BETWEEN BOTTOM OF CONNECTOR AND BOTTOM PANEL OPENING.

5 SEE TABLE FOR COLOR OF LEDS AND NUMBER REQUIRED.

6. THIS MODULAR JACK WITH INTEGRATED LED IS NOT IR REFLOW SOLDERING PROCESS COMPATIBLE.

7 OBSOLETE PARTS: OBSOLETE CIS STREAMLINING PER D.RENAUD/D.SINISI

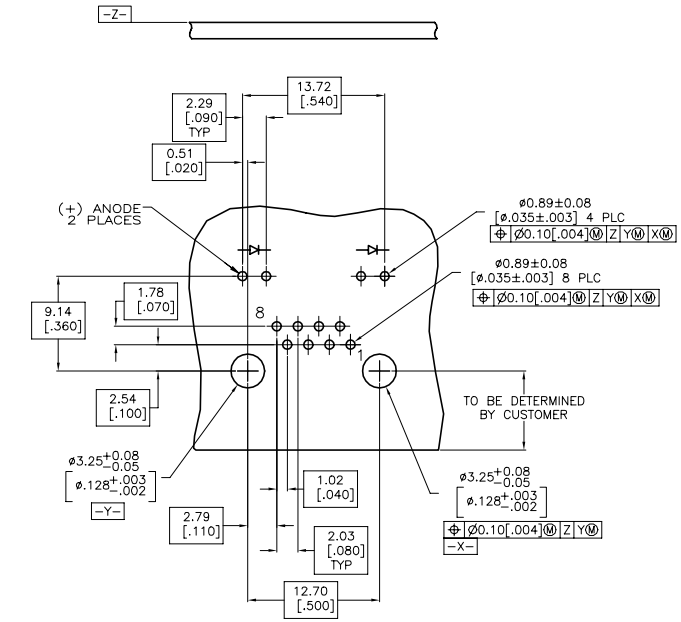

RECOMMENDED PRINTED CIRCUIT BOARD LAYOUT
(COMPONENT SIDE)

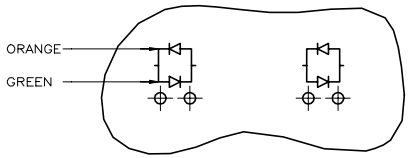

LED CURRENT DIAGRAM
406508-7 ONLY

7	OBSOLETE	ORANGE/GREEN	ORANGE/GREEN	~~406508-7~~
	OBSOLETE	YELLOW	YELLOW	~~406508-6~~
	OBSOLETE	GREEN	GREEN	~~406508-5~~
7	SUPERSEDED	GREEN	YELLOW	~~406508-4~~
	7 OBSOLETE	YELLOW	–	~~406508-3~~
		–	GREEN	~~406508-2~~
		YELLOW	GREEN	~~406508-1~~
		POSITION 2	POSITION 1	PART NUMBER
		INDICATOR COLOR		

THIS DRAWING IS A CONTROLLED DOCUMENT.

DIMENSIONS: mm [INCHES]

TOLERANCES UNLESS OTHERWISE SPECIFIED: 0 PLC ± – ; 1 PLC ± – ; 2 PLC ± 0.25[.01] ; 3 PLC ± 0.13[.005] ; 4 PLC ± – ; ANGLES ± –

MATERIAL: SEE NOTE 1

FINISH: SEE NOTE 1

DWN T. SPRINKLE 17SEP97
CHK T. SPRINKLE 17SEP97
APVD M. DERSTINE 17SEP97

PRODUCT SPEC 108-1163-4
APPLICATION SPEC 114-2154
WEIGHT 0.000000

TE Connectivity

NAME: INVERTED MODULAR JACK ASSEMBLY, 1X1, LED, ZERO INSERTION FORCE

SIZE A1 | CAGE CODE 00779 | DRAWING NO C-406508 | RESTRICTED TO –

CUSTOMER DRAWING | SCALE 4:1 | SHEET 1 OF 1 | REV C3

4805 (1/15)

Downloaded From Oneyac.com

单击下面可查看定价，库存，交付和生命周期等信息

>>TE Connectivity(泰科)

Downloaded From Oneyac.com