THIS DRAWING IS UNPUBLISHED. RELEASED FOR PUBLICATION 2006
© COPYRIGHT 2006 BY - ALL RIGHTS RESERVED.

REVISIONS					
P	LTR	DESCRIPTION	DATE	DWN	APVD
	B6	REVISED PER ECR-17-014013	12FEB2018	SRG	MKO

PN 0-1 AS SHOWN

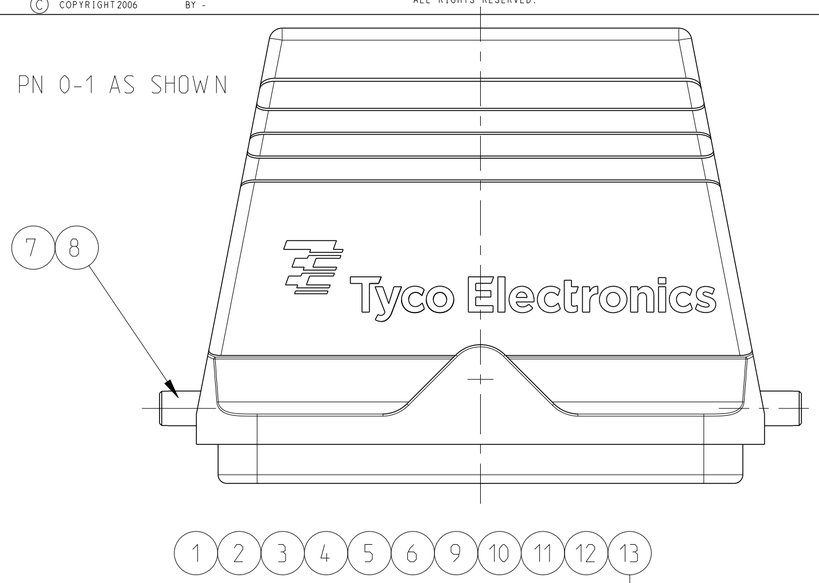

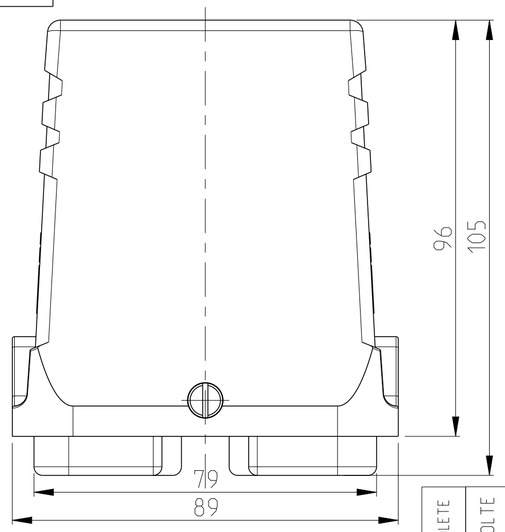

PN 1-2

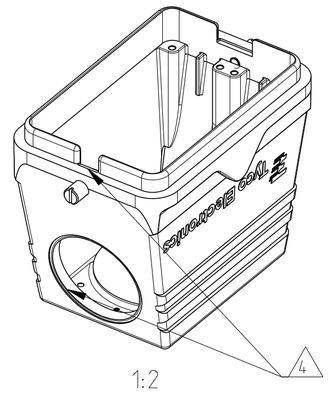

1:2

PN 0-7 AS SHOWN

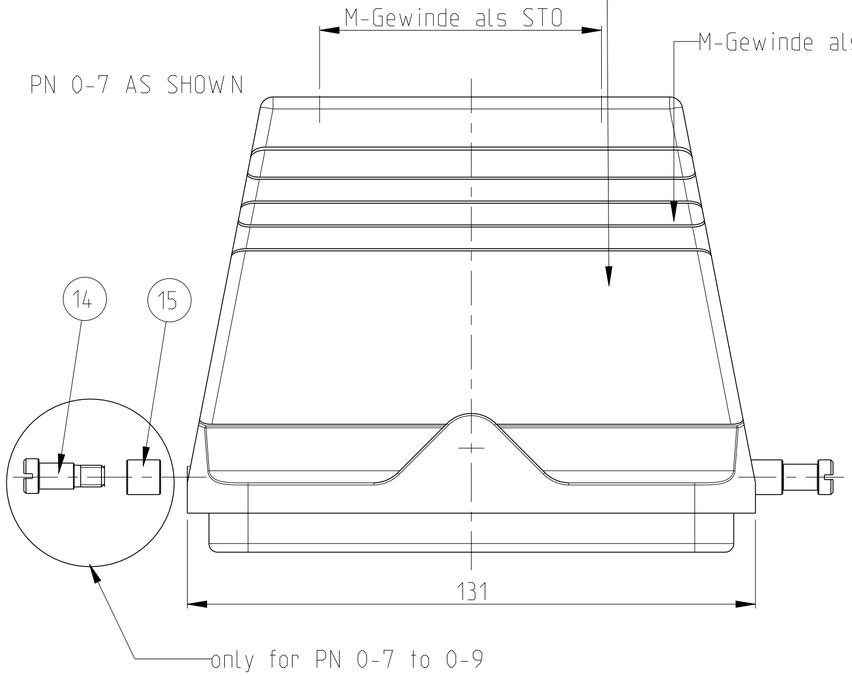

1-2	1-1	1-0	0-9	0-8	0-7	0-6	0-5	0-4	0-3	0-2	0-1	DESCRIPTION	MATERIAL	SURFACE	COLOR	ITEM	NOTES
OBSOLETE							OBSOLETE	OBSOLTE	OBSOLTE		OBSOLTE						
1												HOOD-HB-K		ALUMINIUM OXID	BLACK	16	SMALL CODING NUT
			2	2	2							SLIDE SPOOL - STÄUBLI	BRASS	BLANC		15	
			2	2	2							CLIP BOLT	STAINLESS STEEL	BLANC		14	
	1											HOOD-HB	ALUMINIUM		GREY	13	
		1										HOOD-HB	ALUMINIUM		GREY	12	WITHOUT HTS-LOGO
			1									HOOD-HB	ALUMINIUM		GREY	11	WITHOUT HTS-LOGO
				1								HOOD-HB	ALUMINIUM		GREY	10	WITHOUT HTS-LOGO
					1							HOOD-HB	ALUMINIUM		GREY	9	WITHOUT HTS-LOGO
2						2		2	2			CLIP BOLT	STAINLESS STEEL	BLANC		8	
	2	2					2			2	2	CLIP BOLT	STEEL	ZINK PLATED	BLUE	7	
						1						HOOD-HB-K	ALUMINIUM	ALUMINIUM OXID	BLACK	6	
							1					HOOD-HB	ALUMINIUM		GREY	5	
								1				HOOD-HB-K	ALUMINIUM	ALUMINIUM OXID	BLACK	4	
									1			HOOD-HB-K	ALUMINIUM	ALUMINIUM OXID	BLACK	3	
										1		HOOD-HB	ALUMINIUM		GREY	2	
											1	HOOD-HB	ALUMINIUM		GREY	1	
											HB.48.STO-GR.1.M50.G						
										HB.48.STS-GR.1.M50.G							
									HB-K.48.STO-GR.1.M63.G								
								HB-K.48.STS-GR.1.M50.G									
							HB.48.STS-GR.1.M40.G										
						HB-K.48.STO-GR.1.M50.G											
					HB.48.STO-GR.1.M50.G												
				HB.48.STS-GR.1.M50.G													
			HB.48.ST-GR														
		HB.48.STO-GR.1.M40.G															
	HB.48.STO-GR.2.M25.G																
HB-K.48.STS-GR.1.M50.G-Code																	

NOTES

1. PART SHALL BE FREE AND CLEAN OF BURRS AND OTHER FOREIGN MATERIAL
2. PACKAGING: QUANTITY 3 PIECES
3. VARNISHING INSIDE HOUSING NOT REQUIRED
4. GLAND FITTING THREAD IS ORIENTATED TO THE SMALLER POLARIZATION NOTCH

THIS DRAWING IS A CONTROLLED DOCUMENT.

DIMENSIONS: mm

TOLERANCES UNLESS OTHERWISE SPECIFIED:
0 PLC ±
1 PLC ±
2 PLC ±
3 PLC ±
4 PLC ±
ANGLES ±1°

MATERIAL -
FINISH -

DWN R.SCHNEIDER 27JAN2009
CHK T.SCHNURPFEIL 27JAN2009
APVD -
PRODUCT SPEC -
APPLICATION SPEC -
WEIGHT -

TE Connectivity

NAME HOOD
HB.48.STO-GR.1.M50.G

SIZE	CAGE CODE	DRAWING NO	RESTRICTED TO
A2	00779	C-1106482	

CUSTOMER DRAWING | SCALE 1:1 | SHEET 1 OF 1 | REV B6

1471-9 (3/13)

Downloaded From Oneyac.com

单击下面可查看定价，库存，交付和生命周期等信息

>>TE Connectivity(泰科)

Downloaded From Oneyac.com