DRAWING MADE IN THIRD ANGLE PROJECTION

© COPYRIGHT 1974 BY AMP INCORPORATED, HARRISBURG, PA. ALL INTERNATIONAL RIGHTS RESERVED. AMP INCORPORATED PRODUCTS COVERED BY U. S. AND FOREIGN PATENTS AND/OR PATENTS PENDING.

LOC L | DIST 37

REVISIONS

P	F	ZONE	LTR	DESCRIPTION	DATE	APPROVED
			A	WAS SK-38900-C DS	7-16-75	JPA
			B	REV. FERRULE & CONTACTS; ADDED BOOT & RING KSC	9-24-75	JPA
			C	REVISED DS	4-5-76	JPA
			D	1.200 WAS 1.250, .02 TOL WAS .01 TOL, ECN 8186 YH	11-9-77	
	✓		E	REV. PER E.C.N. 8610 AG	1-31-79	YH

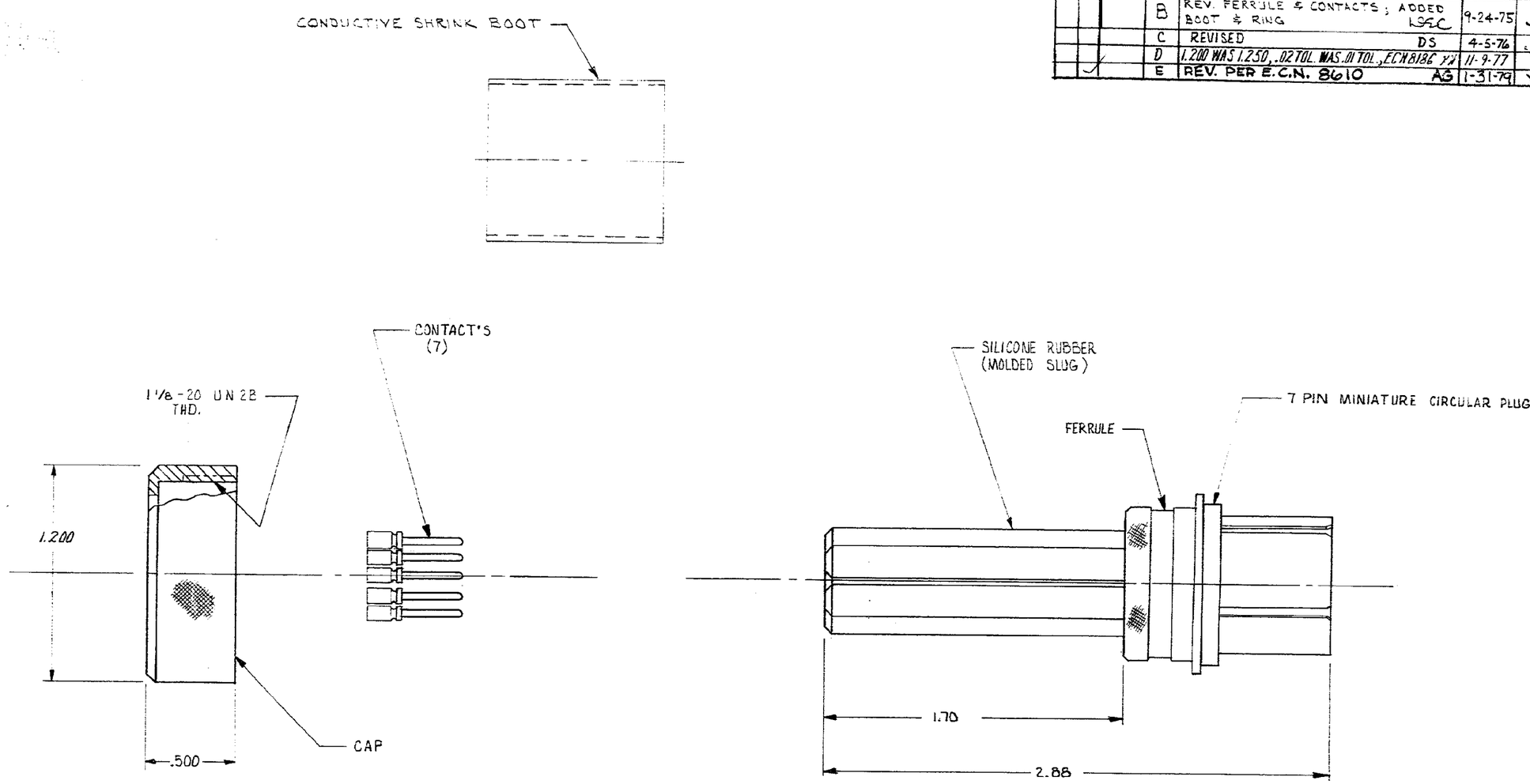

NOTES:

1. THIS PLUG MUST BE ASSEMBLED ON .125 DIA, 16-22 AWG, TEFLON INSULATED WIRE.

862003-2 AS SHOWN, RIGHT ANGLE SHRINK BOOT
862003-1 AS SHOWN, STRAIGHT SHRINK BOOT

PART NO

NEXT ASSY	FINAL ASSY	NEXT ASSY	USED ON
QTY REQD		APPLICATION	

UNLESS OTHERWISE SPECIFIED DIMENSIONS ARE IN INCHES.
TOLERANCES:
.00 ±.02 .000 ±.005
ANGLES ±

MATERIAL

FINISH

CONTRACT NO

DR DICK STONE 11-26-74

CHK

APPD H. Herrmann 11-27-74

APPD

DSGN APPD

OTHER APPD

AMP INCORPORATED Elizabethtown, Pa.

NAME 7 PIN MINIATURE CIRCULAR PLUG KIT, SHIELDED

SIZE	CODE IDENT NO	NUMBER
C	00779	862003

SCALE NY | WT | SHEET 1 OF 1

REV. E

AMP 1471-5 (1-73)

CUSTOMER DRAWING

Downloaded From Oneyac.com

单击下面可查看定价，库存，交付和生命周期等信息

>>TE Connectivity(泰科)

Downloaded From Oneyac.com