THIS DRAWING IS UNPUBLISHED. RELEASED FOR PUBLICATION ,19 .
© COPYRIGHT 19 BY AMP INCORPORATED. ALL RIGHTS RESERVED.

LOC	DIST
G	16

REVISIONS

P	LTR	DESCRIPTION	DATE	DWN	APVD
	O	RELEASED, WAS 92-4072-2313-11	-	-	-
	A	REV PER ECN 0720-0290-94	10/19/94	KDL	JPK
		AND ECN 0720-0430-94			
	B	REV PER ECN 0720-0446-94	12/16/94	KW	JK
	C	REV PER ECN 0K50-0003-96	08/13/96	KW	JK
	D	REV PER EC# 0K40-0140-00	7-10-00	PC	GI

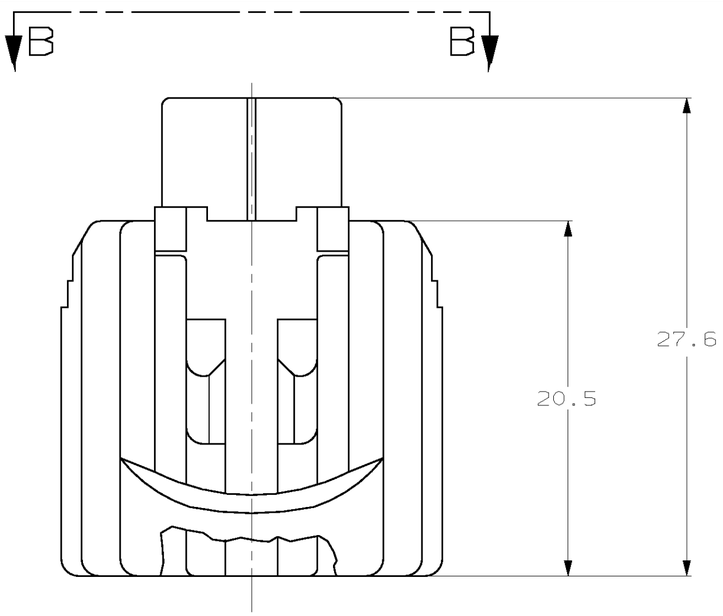

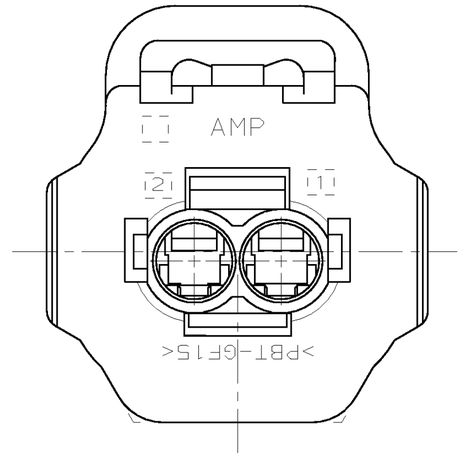

VIEW B-B

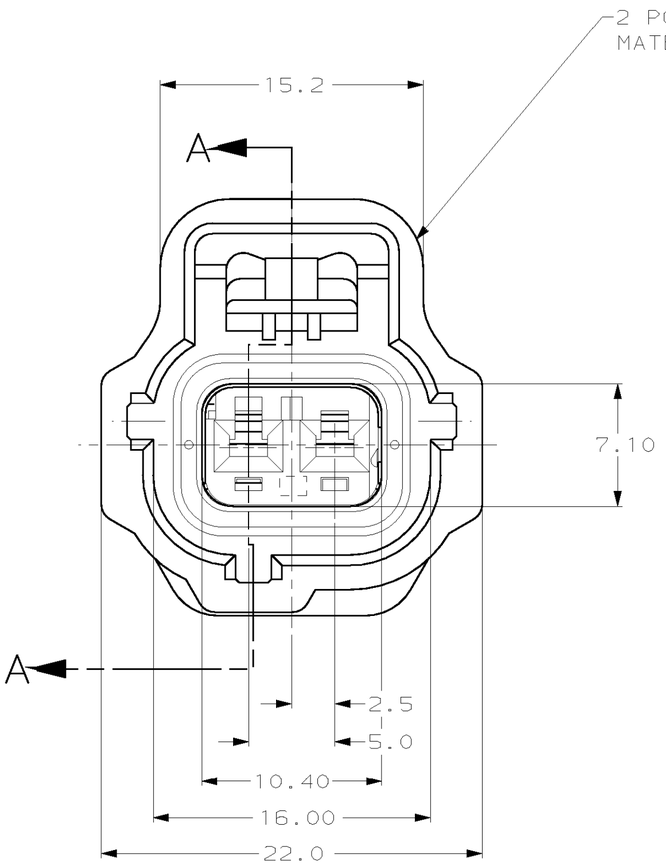

KEYING TYPE L

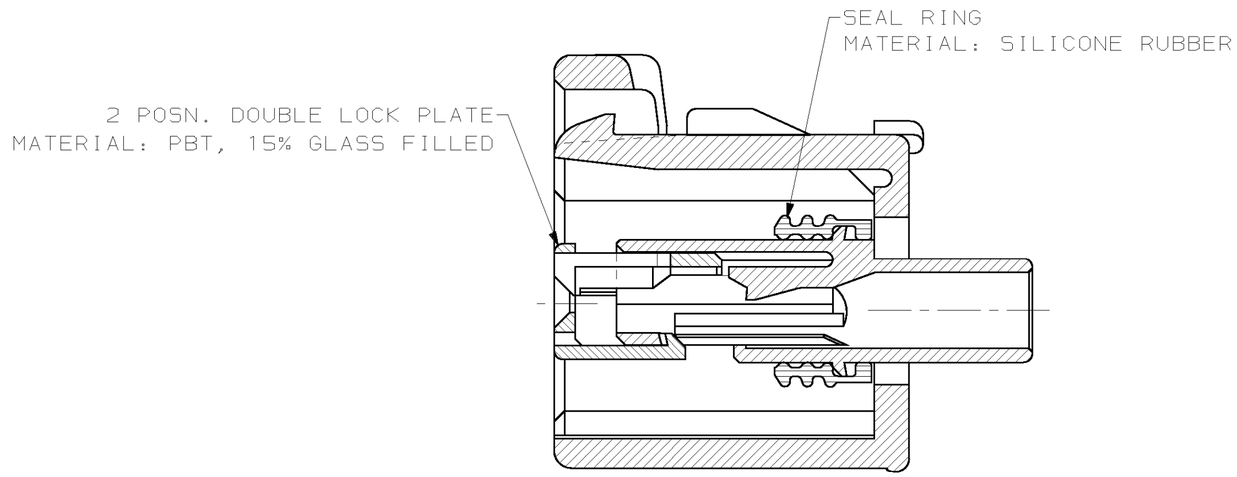

SECTION A-A

NATURAL	184020-1
PLUG COLOR	PART NO

THIS DRAWING IS A CONTROLLED DOCUMENT FOR AMP INCORPORATED. IT IS SUBJECT TO CHANGE AND THE CONTROLLING ENGINEERING ORGANIZATION SHOULD BE CONTACTED FOR THE LATEST REVISION.

DIMENSIONS: mm

TOLERANCES UNLESS OTHERWISE SPECIFIED:
0 PLC ±-
1 PLC ±0.30
2 PLC ±0.15
3 PLC ±-
4 PLC ±-
ANGLES ±1°

MATERIAL –
FINISH –

DWN KD LYTLE 3/28/94
CHK JP KUNKLE 4/19/94
APVD –
PRODUCT SPEC –
APPLICATION SPEC –
WEIGHT –

AMP Incorporated
Harrisburg, PA 17105-3608

NAME 1 X 2 PLG ASY KEY L-C3

SIZE	CAGE CODE	DRAWING NO
A2	00779	C-184020

CUSTOMER DRAWING

SCALE	SHEET	OF	REV
4:1	1	1	D

184020

AMP 1471-9 REV 10/93

Downloaded From Oneyac.com

14 AUG 199610:16:29 AMP33084<US128A>DEPT1135>U.SENSOR>U.2POSN>U.ASSY>U.USSY>U.REV

单击下面可查看定价，库存，交付和生命周期等信息

>>TE Connectivity(泰科)

Downloaded From Oneyac.com