THIS DRAWING IS UNPUBLISHED. RELEASED FOR PUBLICATION 20
© COPYRIGHT 20 BY TYCO ELECTRONICS CORPORATION ALL RIGHTS RESERVED.

REVISIONS					
P	LTR	DESCRIPTION	DATE	DWN	APVD
	A2	ECO-14-004886	31MAR2014	DR	DR
	A3	ECO-18-014358	09SEP2018	PK	DR

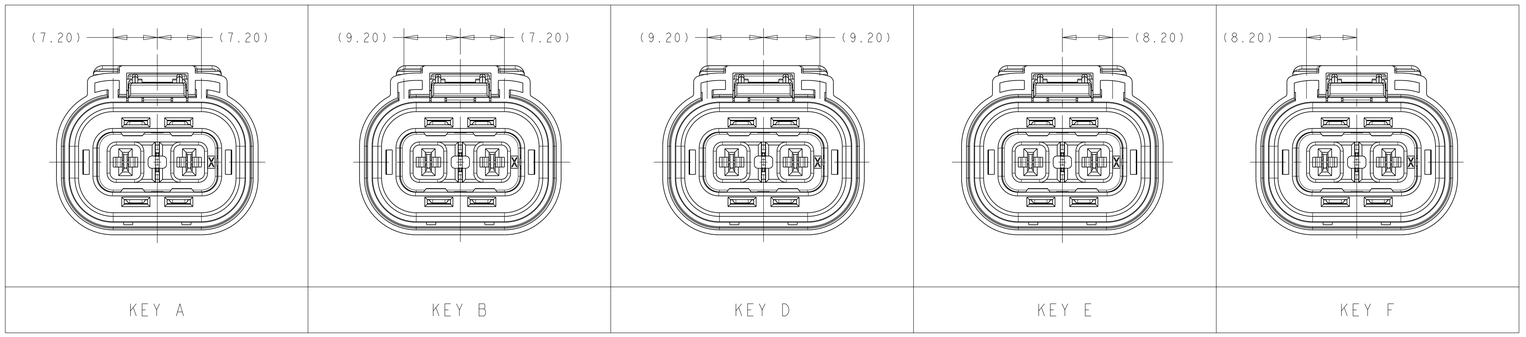

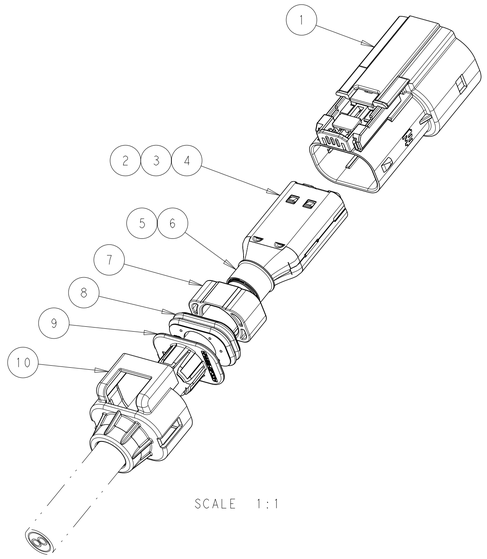

SCALE 1:1

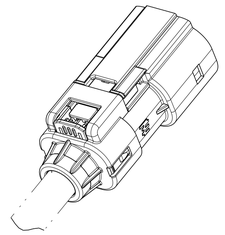

SCALE 1:1

1. ALL TERMINALS MUST BE FULLY SEATED AND LOCKED IN POSITION TWO PLACES PER TERMINAL

2. INNER HOUSING SUB-ASSEMBLY MUST BE FULLY LOCKED 4 PLACES

3. CABLE SEAL RETAINER MUST BE FULLY LOCKED 2 PLACES

4. PARTS ARE NOT AVAILABLE BY THESE NUMBERS FULLY ASSEMBLED AS SHOWN. FINAL ASSEMBLY REQUIRES INDIVIDUAL COMPONENTS OR SUB-ASSEMBLIES LISTED IN THE PARTS LIST AND AVAILABLE SEPARATELY FROM TE. CONSULT INDIVIDUAL CUSTOMER DRAWINGS FOR PART RELEASE STATUS.

5. VALIDATED CABLE / SUBCOMPONENT COMBINATION

6. MATES WITH Ag SHIELD HEADERS SHOWN ON TE DRAWING 2103124

7. NOTE DELETED

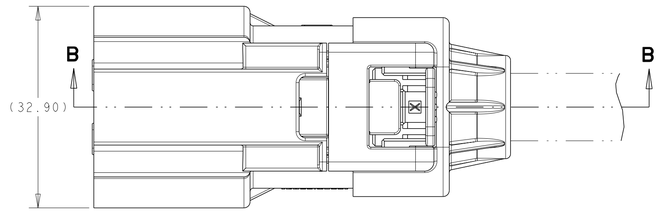

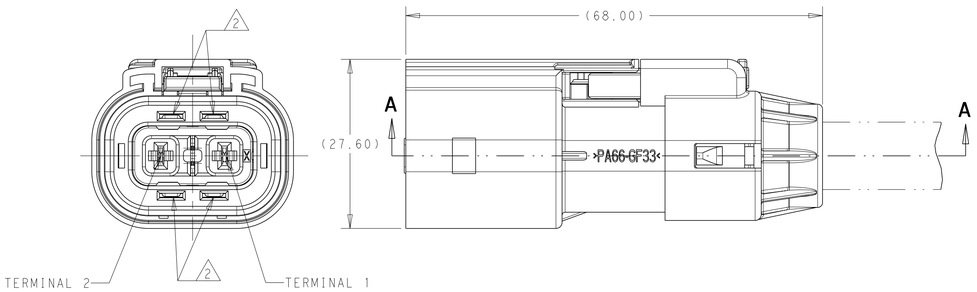

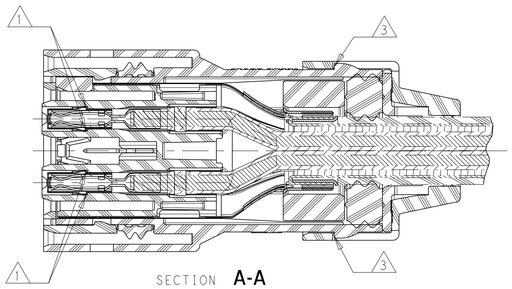

SECTION **A-A**

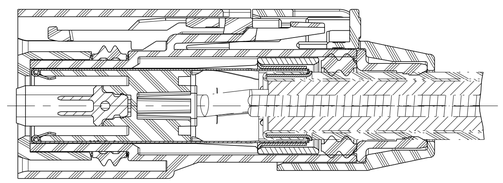

SECTION **B-B**

F	E	D	B	A	F	E	D	B	A	F	E	D	B	A	ASSEMBLY INDEX		
1	1	1	1	1	1	1	1	1	1	—	—	—	—	—	2103013-2	SEAL RETAINER, CABLE, SIZE 2	10
—	—	—	—	—	—	—	—	—	—	1	1	1	1	1	2103013-1	SEAL RETAINER, CABLE, SIZE 1	10
1	1	1	1	1	1	1	1	1	1	—	—	—	—	—	2103155-3	COLLET, SIZE 3	9
—	—	—	—	—	—	—	—	—	—	1	1	1	1	1	2103155-1	COLLET, SIZE 1	9
1	1	1	1	1	1	1	1	1	1	—	—	—	—	—	2103154-3	SEAL, CABLE, SIZE 3	8
—	—	—	—	—	—	—	—	—	—	1	1	1	1	1	2103154-1	SEAL, CABLE, SIZE 1	8
1	1	1	1	1	1	1	1	1	1	1	1	1	1	1	2103153-1	SPACER	7
1	1	1	1	1	1	1	1	1	1	—	—	—	—	—	1587724-2	FERRULE, OUTER, SIZE B	6
—	—	—	—	—	—	—	—	—	—	1	1	1	1	1	1587724-3	FERRULE, OUTER, SIZE C	6
1	1	1	1	1	1	1	1	1	1	—	—	—	—	—	1587723-2	FERRULE, INNER, SIZE B	5
—	—	—	—	—	—	—	—	—	—	1	1	1	1	1	1587723-3	FERRULE, INNER, SIZE C	5
2	2	2	2	2	2	2	2	2	2	—	—	—	—	—	1-2103157-2	SHIELD, PLUG, Ag, SIZE 2	4
—	—	—	—	—	—	—	—	—	—	2	2	2	2	2	1-2103157-1	SHIELD, PLUG, Ag, SIZE 1	4
2	2	2	2	2	—	—	—	—	—	—	—	—	—	—	1-968851-3	MCP 2.8 TERMINAL FEMALE, Ag, >1.0-2.5mm^2	3
—	—	—	—	—	2	2	2	2	2	2	2	2	2	2	1-968853-3	MCP 2.8 TERMINAL FEMALE, Ag, >2.5-4.0mm^2	3
1	1	1	1	1	1	1	1	1	1	1	1	1	1	1	1587985-1	INNER HOUSING, SUBASSY, SHUNTED	2
1	—	—	—	—	1	—	—	—	—	1	—	—	—	—	4-2103015-6	PLUG SUBASSY, KEY F, FINGER LATCH, WITH CPA	1
—	1	—	—	—	—	1	—	—	—	—	1	—	—	—	4-2103015-5	PLUG SUBASSY, KEY E, FINGER LATCH, WITH CPA	1
—	—	1	—	—	—	—	1	—	—	—	—	1	—	—	4-2103015-4	PLUG SUBASSY, KEY D, FINGER LATCH, WITH CPA	1
—	—	—	1	—	—	—	—	1	—	—	—	—	1	—	4-2103015-2	PLUG SUBASSY, KEY B, FINGER LATCH, WITH CPA	1
—	—	—	—	1	—	—	—	—	1	—	—	—	—	1	4-2103015-1	PLUG SUBASSY, KEY A, FINGER LATCH, WITH CPA	1
															PART NO	DESCRIPTION	ITEM NO
2-2103437-6	2-2103437-5	2-2103437-4	2-2103437-2	2-2103437-1	1-2103437-6	1-2103437-5	1-2103437-4	1-2103437-2	1-2103437-1	2103437-6	2103437-5	2103437-4	2103437-2	2103437-1	REFERENCE NUMBER 4 ⟸ THESE NUMBERS ARE FOR REFERENCE PURPOSE ONLY AND ARE NOT FOR SALE		
QTY REQ PER ASSY					QTY REQ PER ASSY					QTY REQ PER ASSY					PARTS LIST		
5 COROPLAST 9-2641					5 DRAKA FLR91XBC33X					5 COROPLAST 9-2641					CABLE SUPPLIER/ SPECIFICATION		
5 2x2.5mm^2					5 2x4.0mm^2					5 2x4.0mm^2					CABLE SIZE		

THIS DRAWING IS A CONTROLLED DOCUMENT.

DIMENSIONS: mm

TOLERANCES UNLESS OTHERWISE SPECIFIED: ±0.50; 1 PLC ±; 2 PLC ±; 3 PLC ±; 4 PLC ±; ANGLES ±1°

MATERIAL - -

FINISH - -

DWN	D. RHEIN	01MAR2013
CHK	D. RHEIN	04MAR2013
APVD	A. GUANCO	04MAR2013
PRODUCT SPEC	108-32020	
APPLICATION SPEC	114-13305	
WEIGHT	-	

TE Connectivity

NAME: PLUG ASSEMBLY, SHUNTED HVIL, HVA280-2PHM, REFERENCE DRAWING

SIZE	CAGE CODE	DRAWING NO	RESTRICTED TO
A1	00779	C-2103437	

CUSTOMER DRAWING | SCALE 2:1 | SHEET 1 OF 1 | REV A3

4805 (3/13)

Downloaded From Oneyac.com

ONEYAC 唯样商城 | 电子元器件线上授权代理开拓者
原厂授权 · 正品现货 · 一件即发

单击下面可查看定价，库存，交付和生命周期等信息

>>TE Connectivity(泰科)

Downloaded From Oneyac.com