LM101AQML Operational Amplifiers

Check for Samples: LM101AQML

FEATURES

- **Available with Radiation Guarantee**
- **Offset Voltage 3 mV Maximum Over Temperature**
- **Input Current 100 nA Maximum Over Temperature**
- **Offset Current 20 nA Maximum Over Temperature**
- **Ensured Drift Characteristics**
- **Offsets Specified Over Entire Common Mode and Supply Voltage Ranges**
- **Slew Rate of 10 V/µS as a Summing Amplifier**

DESCRIPTION

The LM101A is a general purpose operational amplifier which features improved performance over industry standards such as the LM709. Advanced processing techniques make possible an order of magnitude reduction in input currents, and a redesign of the biasing circuitry reduces the temperature drift of input current. Improved specifications include:

- Offset voltage 3 mV maximum over temperature
- Input current 100 nA maximum over temperature
- Offset current 20 nA maximum over temperature
- Specified drift characteristics
- Offsets ensured over entire common mode and supply voltage ranges
- Slew rate of 10V/µs as a summing amplifier
  - This amplifier offers many features which make its application nearly foolproof: overload protection on the input and output, no latch-up when the common mode range is exceeded, and freedom from oscillations and compensation with a single 30 pF capacitor. It has advantages over internally compensated amplifiers in that the frequency compensation can be tailored to the particular application. For example, in low frequency circuits it can be overcompensated for increased stability margin. Or the compensation can be optimized to give more than a factor of ten improvement in high frequency performance for most applications.
  - In addition, the device provides better accuracy and lower noise in high impedance circuitry. The low input currents also make it particularly well suited for long interval integrators or timers, sample and hold circuits and low frequency waveform generators. Further, replacing circuits where matched transistor pairs buffer the inputs of conventional IC op amps, it can give lower offset voltage and a drift at a lower cost.

Please be aware that an important notice concerning availability, standard warranty, and use in critical applications of Texas Instruments semiconductor products and disclaimers thereto appears at the end of this data sheet.

All trademarks are the property of their respective owners.

PRODUCTION DATA information is current as of publication date. Products conform to specifications per the terms of the Texas Instruments standard warranty. Production processing does not necessarily include testing of all parameters.

Copyright © 2006–2013, Texas Instruments Incorporated

Downloaded From Oneyac.com

These devices have limited built-in ESD protection. The leads should be shorted together or the device placed in conductive foam during storage or handling to prevent electrostatic damage to the MOS gates.

Schematic

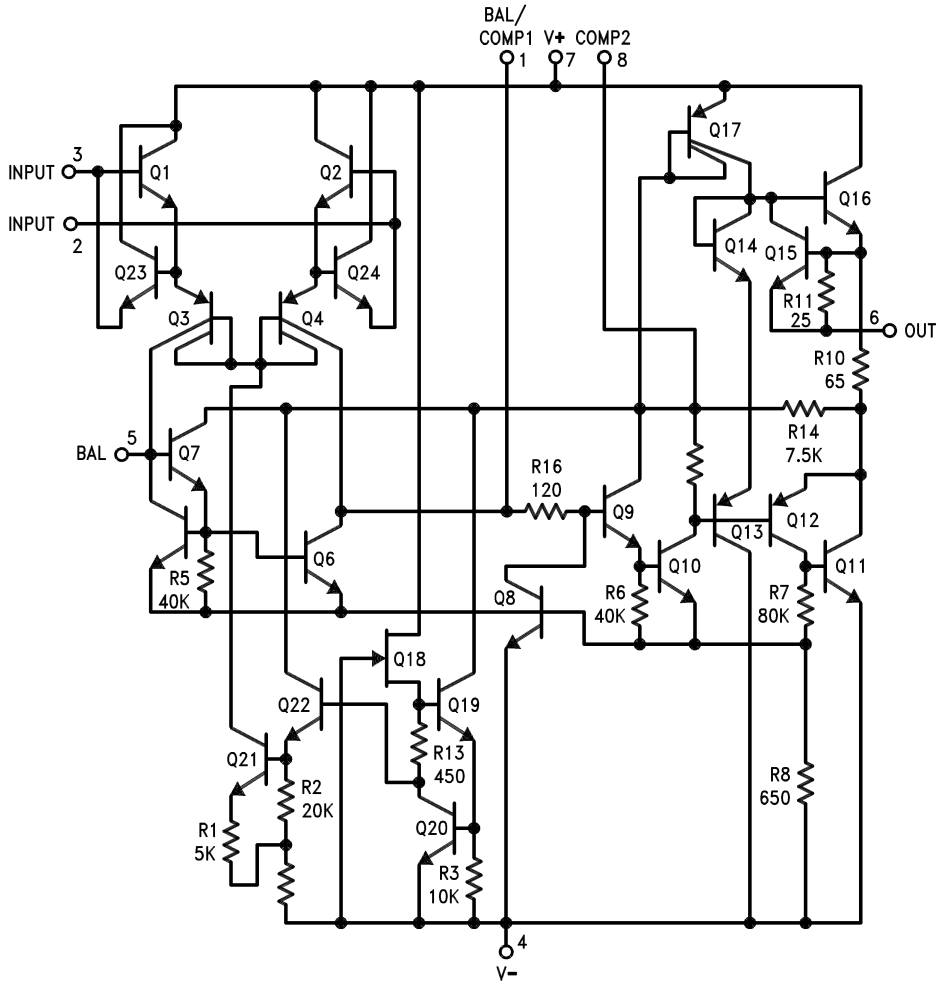

Pin connections shown are for 8-pin packages.

Connection Diagrams

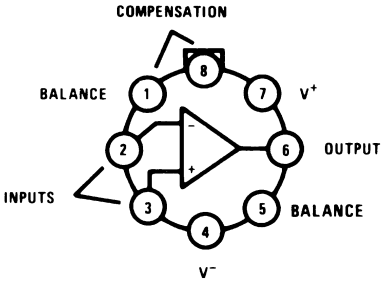

Note: Pin 4 connected to case.

Figure 1. TO Package (Top View)
See Package Number LMC0008C

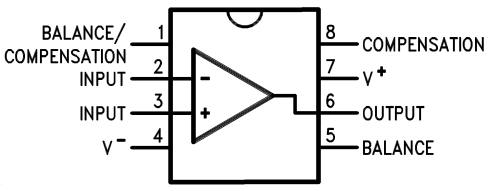

Figure 2. CDIP Package (Top View)
See Package Number NAB0008A

Copyright © 2006–2013, Texas Instruments Incorporated

Downloaded From Oneyac.com

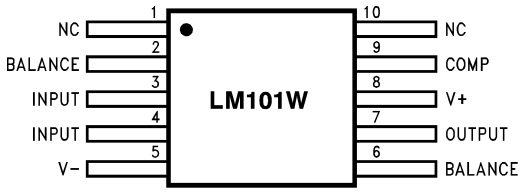

Figure 3. CLGA Package (Top View)
See Package Number NAD0010A

Fast AC/DC Converter

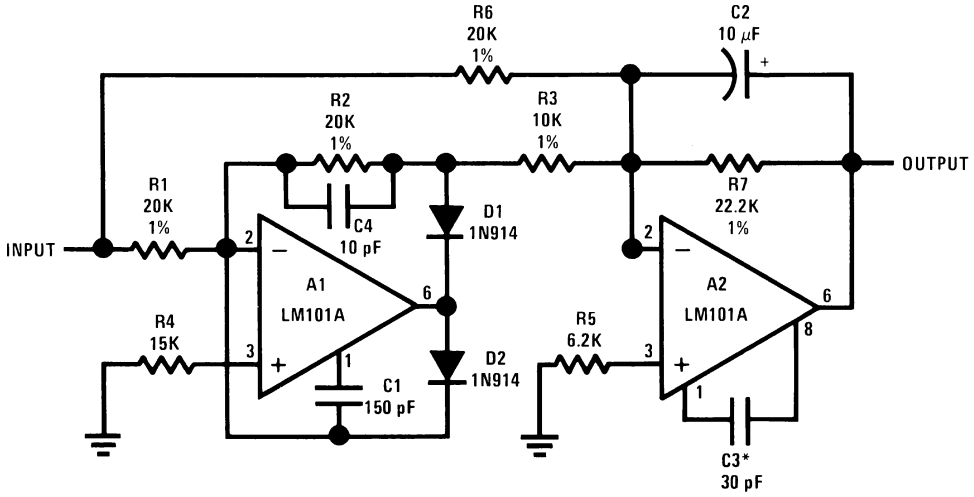

Note: Feedforward compensation can be used to make a fast full wave rectifier without a filter.

Downloaded From Oneyac.com

Absolute Maximum Ratings[1]

Supply Voltage				±22V
Differential Input Voltage				±30V
Input Voltage[2]				±15V
Output Short Circuit Duration				Continuous
Operating Ambient Temp. Range				$-55°C \le T_A \le +125°C$
T_J Max				150°C
Power Dissipation at $T_A = 25°C$[3]		LMC-Package	(Still Air)	750 mW
			(500 LF / Min Air Flow)	1200 mW
		NAB-Package	(Still Air)	1000 mW
			(500 LF / Min Air Flow)	1500 mW
		NAD-Package	(Still Air)	500mW
			(500 LF / Min Air Flow)	800mW
Thermal Resistance	θ_{JA}	LMC-Package	(Still Air)	165°C/W
			(500 LF / Min Air Flow)	89°C/W
		NAB-Package	(Still Air)	128°C/W
			(500 LF / Min Air Flow)	75°C/W
		NAD-Package	(Still Air)	233°C/W
			(500 LF / Min Air Flow)	155°C/W
	θ_{JC} (Typical)	LMC-Package		39°C/W
		NAB-Package		26°C/W
		NAD-Package		26°C/W
Storage Temperature Range				$-65°C \le T_A \le +150°C$
Lead Temperature (Soldering, 10 sec.)				300°C
ESD Tolerance[4]				3000V

(1) Absolute Maximum Ratings indicate limits beyond which damage to the device may occur. Operating ratings indicate conditions for which the device is intended to be functional, but do no ensure specific performance limits. For ensured specifications and test conditions, see the Electrical Characteristics. The specifications apply only for the test conditions listed. Some performance characteristics may degrade when the device is not operated under the listed test conditions.
(2) For supply voltages less than ±15V, the absolute maximum input voltage is equal to the supply voltage.
(3) The maximum power dissipation must be derated at elevated temperatures and is dictated by T_{Jmax} (maximum junction temperature), θ_{JA} (package junction to ambient thermal resistance), and T_A (ambient temperature). The maximum allowable power dissipation at any temperature is $P_{Dmax} = (T_{Jmax} - T_A) / \theta_{JA}$ or the number given in the Absolute Maximum Ratings, whichever is lower.
(4) Human body model, 100 pF discharged through 1.5 kΩ.

Quality Conformance Inspection

Mil-Std-883, Method 5005 - Group A

Subgroup	Description	Temp (°C)
1	Static tests at	25
2	Static tests at	125
3	Static tests at	-55
4	Dynamic tests at	25
5	Dynamic tests at	125
6	Dynamic tests at	-55
7	Functional tests at	25
8A	Functional tests at	125
8B	Functional tests at	-55
9	Switching tests at	25
10	Switching tests at	125
11	Switching tests at	-55

Copyright © 2006–2013, Texas Instruments Incorporated

Downloaded From Oneyac.com

LM101A 883 Electrical Characteristics DC Parameters

The following conditions apply to all parameters, unless otherwise specified
V_{CC} = ±20V, V_{CM}= 0V

Symbol	Parameter	Conditions	Notes	Min	Max	Units	Sub-groups
V_{IO}	Input Offset Voltage	V_{CM} = -15V, R_S = 50Ω		-2.0	2.0	mV	1
				-3.0	3.0	mV	2, 3
		V_{CM} = 15V, R_S = 50Ω		-2.0	2.0	mV	1
				-3.0	3.0	mV	2, 3
		R_S = 50Ω		-2.0	2.0	mV	1
				-3.0	3.0	mV	2, 3
		V_{CC} = ±5V, R_S = 50Ω		-2.0	2.0	mV	1
				-3.0	3.0	mV	2, 3
I_{IO}	Input Offset Current	V_{CM} = -15V		-10	10	nA	1
				-20	20	nA	2, 3
		V_{CM} = 15V		-10	10	nA	1
				-20	20	nA	2, 3
				-10	10	nA	1
				-20	20	nA	2, 3
		V_{CC} = ±5V		-10	10	nA	1
				-20	20	nA	2, 3
±I_{IB}	Input Bias Current	V_{CM} = -15V		1.0	75	nA	1
				1.0	100	nA	2, 3
		V_{CM} = 15V		1.0	75	nA	1
				1.0	100	nA	2, 3
				1.0	75	nA	1
				1.0	100	nA	2, 3
		V_{CC} = ±5V		1.0	75	nA	1
				1.0	100	nA	2, 3
PSRR+	Power Supply Rejection Ratio	+V_{CC} = +20V and +5V, -V_{CC}=-20V, R_S=50Ω		80		dB	1, 2, 3
PSRR-	Power Supply Rejection Ratio	+V_{CC} = +20V, -V_{CC}= -20V and -5V, R_S=50Ω		80		dB	1, 2, 3
CMRR	Common Mode Rejection Ratio	-15V ≤ V_{CM} ≤ 15V, R_S = 50Ω		80		dB	1, 2, 3
I_{CC}	Supply Current				3.0	mA	1
					2.5	mA	2
					3.5	mA	3
+V_{IO} Adj	Input Offset Voltage Adjust			4.0		mV	1, 2, 3
−V_{IO} Adj	Input Offset Voltage Adjust				-4.0	mV	1, 2, 3
+I_{OS}	Short Circuit Current			-45	-7.0	mA	1, 2, 3
-I_{OS}	Short Circuit Current			7.0	45	mA	1, 2, 3
V_I	Input Voltage Range	V_{CC} = ±20V	See (1)	-15	15	V	1, 2, 3
+A_{VS}	Large Signal Gain	V_{CC} = ±15V, R_S = 0, R_L=2KΩ, V_O =10V		50		V/mV	4
				25		V/mV	5, 6
-A_{VS}	Large Signal Gain	V_{CC} = ±15V, R_S = 0, R_L=2KΩ, V_O =-10V		50		V/mV	4
				25		V/mV	5, 6
R_I	Input Resistance		See (2)	1.5		MΩ	4
			see (2)	0.5		MΩ	5, 6

(1) Parameter specified by the input conditions of several DC parameters
(2) Parameter specified by design, not tested.

Copyright © 2006–2013, Texas Instruments Incorporated

Downloaded From Oneyac.com

LM101A 883 Electrical Characteristics DC Parameters (continued)

The following conditions apply to all parameters, unless otherwise specified
V_{CC} = ±20V, V_{CM}= 0V

Symbol	Parameter	Conditions	Notes	Min	Max	Units	Sub-groups
$+V_{OP}$	Output Voltage Swing	R_L = 10KΩ		16		V	4, 5, 6
		R_L = 2KΩ		15		V	4, 5, 6
		R_L = 10KΩ, V_{CC} = ±15V		12		V	4, 5, 6
		R_L = 2KΩ, V_{CC} = ±15V		10		V	4, 5, 6
$-V_{OP}$	Output Voltage Swing	R_L = 10KΩ			-16	V	4, 5, 6
		R_L = 2KΩ			-15	V	4, 5, 6
		R_L = 10KΩ, V_{CC} = ±15V			-12	V	4, 5, 6
		R_L = 2KΩ, V_{CC} = ±15V			-10	V	4, 5, 6

LM101A 883 Electrical Characteristics AC Parameters

The following conditions apply to all parameters, unless otherwise specified
V_{CC} = ±20V, R_L = 2KΩ, A_V = 1

Symbol	Parameter	Conditions	Notes	Min	Max	Units	Sub-groups
+SR	Slew Rate	V_I = -5V to 5V			0.2	V/µS	7
-SR	Slew Rate	V_I = 5V to -5V			0.2	V/µS	7
G_{BW}	Gain Bandwidth	V_I = 50mV_{RMS}, f = 20KHz			0.25	MHz	7

LM101A QML and RH Electrical Characteristics(1) DC Parameters

The following conditions apply to all parameters, unless otherwise specified
V_{CC} = ±20V, V_{CM} = 0V, R_S = 50Ω

Symbol	Parameter	Conditions	Notes	Min	Max	Units	Sub-groups
V_{IO}	Input Offset Voltage	$+V_{CC}$ = 35V, $-V_{CC}$ = -5V, V_{CM} = -15V		-2.0	+2.0	mV	1
				-3.0	+3.0	mV	2, 3
		$+V_{CC}$ = 5V, $-V_{CC}$ = -35V, V_{CM} = +15V		-2.0	+2.0	mV	1
				-3.0	+3.0	mV	2, 3
		V_{CM} = 0V		-2.0	+2.0	mV	1
				-3.0	+3.0	mV	2, 3
		$+V_{CC}$ = 5V, $-V_{CC}$ = -5V, V_{CM} = 0V		-2.0	+2.0	mV	1
				-3.0	+3.0	mV	2, 3
I_{IO}	Input Offset Current	$+V_{CC}$ = 35V, $-V_{CC}$ = -5V, V_{CM} = -15V, R_S = 100KΩ		-10	+10	nA	1, 2
				-20	+20	nA	3
		$+V_{CC}$ = 5V, $-V_{CC}$ = -35V, V_{CM} = +15V, R_S = 100KΩ		-10	+10	nA	1, 2
				-20	+20	nA	3
		V_{CM} = 0V, R_S = 100KΩ		-10	+10	nA	1, 2
				-20	+20	nA	3
		$+V_{CC}$ = 5V, $-V_{CC}$ = -5V, V_{CM} = 0V, R_S = 100KΩ		-10	+10	nA	1, 2
				-20	+20	nA	3

(1) Pre and post irradiation limits are identical to those listed under AC and DC electrical characteristics. These parts may be dose rate sensitive in a space environment and demonstrate enhanced low dose rate effect. Radiation end point limits for the noted parameters are specified only for the conditions as specified in Mil-Std-883, Method 1019

Copyright © 2006–2013, Texas Instruments Incorporated

Downloaded From Oneyac.com

LM101A QML and RH Electrical Characteristics(1) DC Parameters (continued)

The following conditions apply to all parameters, unless otherwise specified
V_{CC} = ±20V, V_{CM} = 0V, R_S = 50Ω

Symbol	Parameter	Conditions	Notes	Min	Max	Units	Sub-groups
$\pm I_{IB}$	Input Bias Current	$+V_{CC}$ = 35V, $-V_{CC}$ = -5V, V_{CM} = -15V, R_S = 100KΩ		-0.1	75	nA	1, 2
				-0.1	100	nA	3
		$+V_{CC}$ = 5V, $-V_{CC}$ = -35V, V_{CM} = +15V, R_S = 100KΩ		-0.1	75	nA	1, 2
				-0.1	100	nA	3
		V_{CM} = 0V, R_S = 100KΩ		-0.1	75	nA	1, 2
				-0.1	100	nA	3
		$+V_{CC}$ = 5V, $-V_{CC}$ = -5V, V_{CM} = 0V, R_S = 100KΩ		-0.1	75	nA	1, 2
				-0.1	100	nA	3
+PSRR	Power Supply Rejection Ratio	$+V_{CC}$ = 10V, $-V_{CC}$ = -20V		-50	+50	µV/V	1
				-100	+100	µV/V	2, 3
-PSRR	Power Supply Rejection Ratio	$+V_{CC}$ = 20V, $-V_{CC}$ = -10V		-50	+50	µV/V	1
				-100	+100	µV/V	2, 3
CMRR	Common Mode Rejection Ratio	V_{CC} = ±35V to ±5V, V_{CM} = ±15V		80		dB	1, 2, 3
$+V_{IO}$ Adj	Adjustment for Input Offset Voltage			4.0		mV	1, 2, 3
$-V_{IO}$ Adj	Adjustment for Input Offset Voltage				-4.0	mV	1, 2, 3
$+I_{OS}$	Output Short Circuit Current	$+V_{CC}$ = 15V, $-V_{CC}$ = -15V, t ≤ 25mS, V_{CM} = -15V		-60		mA	1, 2, 3
$-I_{OS}$	Output Short Circuit Current	$+V_{CC}$ = 15V, $-V_{CC}$ = -15V, t ≤ 25mS, V_{CM} = +15V			+60	mA	1, 2, 3
I_{CC}	Power Supply Current	$+V_{CC}$ = 15V, $-V_{CC}$ = -15V			3.0	mA	1
					2.32	mA	2
					3.5	mA	3
$\Delta V_{IO}/\Delta T$	Temperature Coefficient of Input Offset Voltage	-55°C ≤ T_A ≤ +25°C	See(2)	-18	+18	µV/°C	2
		+25°C ≤ T_A ≤ +125°C	See(2)	-15	+15	uV/°C	3
$\Delta I_{IO}/\Delta T$	Temperature Coefficient of Input Offset Current	-55°C ≤ T_A ≤ +25°C	See(2)	-200	+200	pA/°C	2
		+25°C ≤ T_A ≤ +125°C	See(2)	-100	+100	pA/°C	3
$-A_{VS}$	Large Signal (Open Loop) Voltage Gain	R_L = 2KΩ, V_O = -15V	See(3)	50		V/mV	4
			See(3)	25		V/mV	5, 6
		R_L = 10KΩ, V_O = -15V	See(3)	50		V/mV	4
			See(3)	25		V/mV	5, 6
$+A_{VS}$	Large Signal (Open Loop) Voltage Gain	R_L = 2KΩ, V_O = +15V	See(3)	50		V/mV	4
			See(3)	25		V/mV	5, 6
		R_L = 10KΩ, V_O = +15V	See(3)	50		V/mV	4
			See(3)	25		V/mV	5, 6
A_{VS}	Large Signal (Open Loop) Voltage Gain	V_{CC} = ±5V, R_L = 2KΩ, V_O = ±2V	See(3)	10		V/mV	4,5, 6
		V_{CC} = ±5V, R_L = 10KΩ, V_O = ±2V	See(3)	10		V/mV	4,5, 6
$+V_{OP}$	Output Voltage Swing	R_L = 10KΩ, V_{CM} = -20V		+16		V	4,5, 6
		RL = 2KΩ, V_{CM} = -20V		+15		V	4,5, 6
$-V_{OP}$	Output Voltage Swing	R_L = 10KΩ, V_{CM} = 20V			-16	V	4,5, 6
		R_L = 2KΩ, V_{CM} = 20V			-15	V	4,5, 6

(2) Calculated parameter
(3) Datalog reading of K = V/mV.

Copyright © 2006–2013, Texas Instruments Incorporated

Downloaded From Oneyac.com

LM101A QM and RH Electrical Characteristics AC Parameters

The following conditions apply to all parameters, unless otherwise specified
V_{CC} = ±20V, V_{CM} = 0V, R_S = 50Ω

Symbol	Parameter	Conditions	Notes	Min	Max	Units	Sub-groups
+SR	Slew Rate	A_V = 1, V_I = -5V to +5V		0.3		V/µS	7, 8A
				0.2		V/µS	8B
-SR	Slew Rate	A_V = 1, V_I = +5V to -5V		0.3		V/µS	7, 8A
				0.2		V/µS	8B
TR_{TR}	Rise Time	A_V = 1, V_I = 50mV			800	nS	7, 8A, 8B
TR_{OS}	Overshoot	A_V = 1, V_I = 50mV			25	%	7
					35	%	8A, 8B
NI_{BB}	Noise Broadband	BW = 10Hz to 5KHz, R_S = 0Ω			15	μV_{RMS}	7
NI_{PC}	Noise Popcorn	BW = 10Hz to 5KHz, R_S = 100KΩ			80	μV_{PK}	7

LM101A QM and RH Electrical Characteristics DC Parameters Drift Values

The following conditions apply to all parameters, unless otherwise specified
V_{CC} = ±20V, V_{CM} = 0V, R_S = 50Ω
Delta calculations performed on QMLV devices at group B, Subgroup 5 only.

Symbol	Parameter	Conditions	Notes	Min	Max	Units	Sub-groups
V_{IO}	Input Offset Voltage	V_{CM} = 0V		-0.5	0.5	mV	1
± I_{IB}	Input Bias Current	V_{CM} = 0V, R_S = 100KΩ		-7.5	7.5	nA	1

Copyright © 2006–2013, Texas Instruments Incorporated

Downloaded From Oneyac.com

Typical Performance Characteristics LM101A

Input Voltage Range

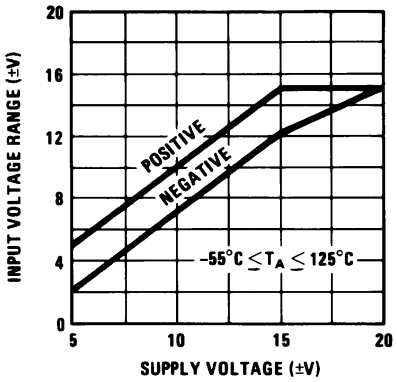

Figure 4.

Output Swing

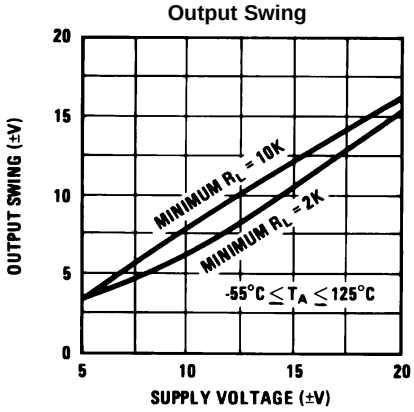

Figure 5.

Voltage Gain

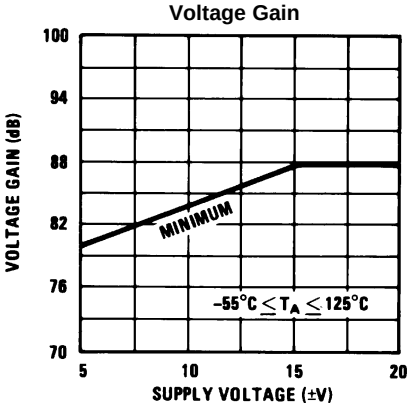

Figure 6.

Supply Current

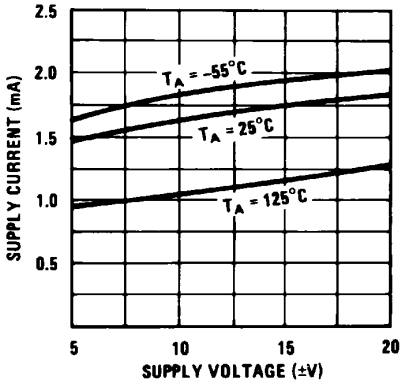

Figure 7.

Voltage Gain

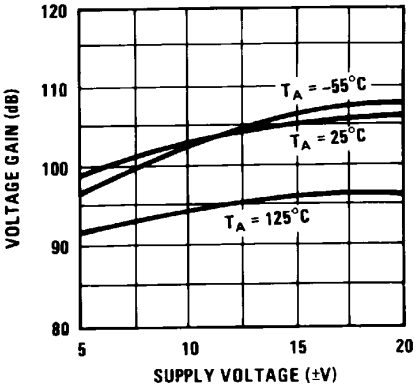

Figure 8.

Maximum Power Dissipation

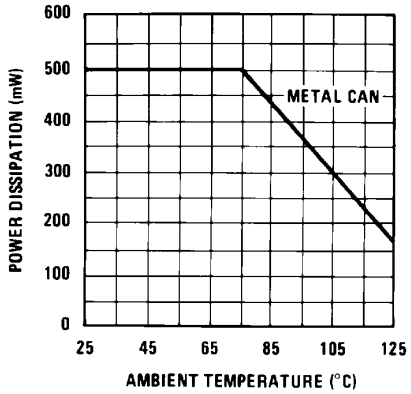

Figure 9.

Downloaded From Oneyac.com

Typical Performance Characteristics LM101A (continued)

Input Current, LM101A

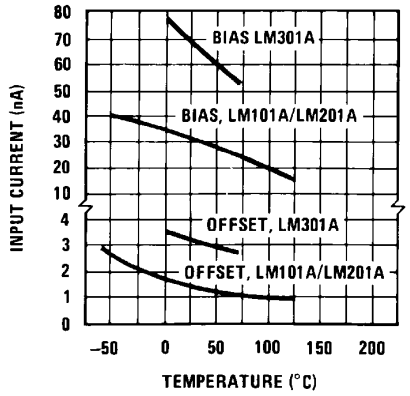

Figure 10.

Current Limiting

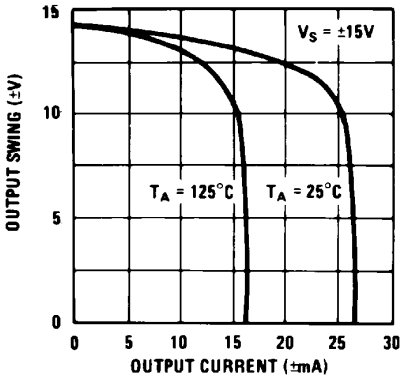

Figure 11.

Input Noise Voltage

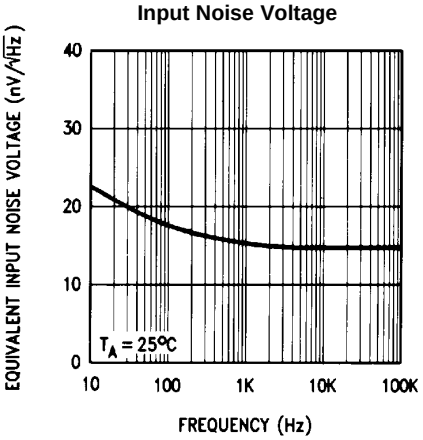

Figure 12.

Input Noise Current

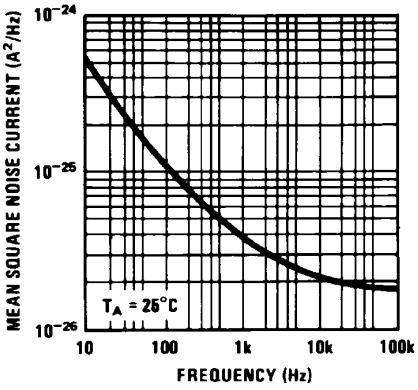

Figure 13.

Common Mode Rejection

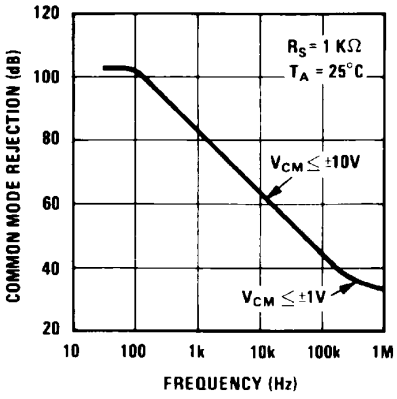

Figure 14.

Power Supply Rejection

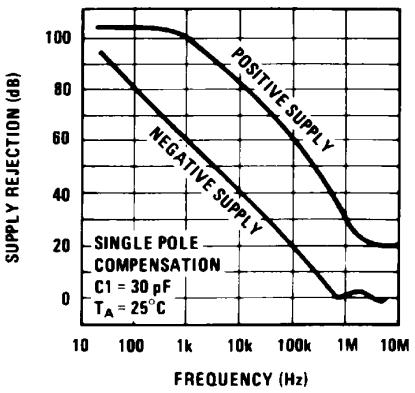

Figure 15.

Copyright © 2006–2013, Texas Instruments Incorporated

Downloaded From Oneyac.com

Typical Performance Characteristics LM101A (continued)

Closed Loop Output Impedance

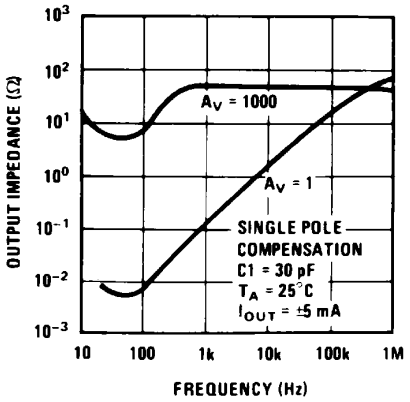

Figure 16.

Downloaded From Oneyac.com

Typical Performance Characteristics for Various Compensation Circuits

Pin connections shown are for 8-pin packages.

Single Pole Compensation

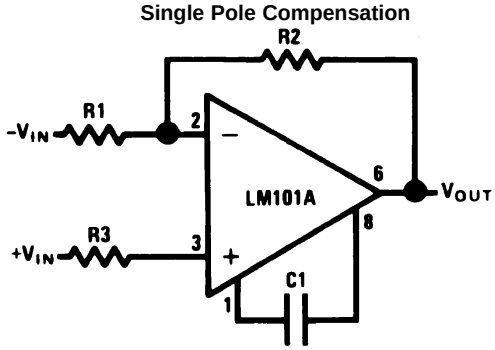

$$C1 \geq \frac{R1\,C_S}{R1 + R2}$$

C_S= 30 pF

Figure 17.

Two Pole Compensation

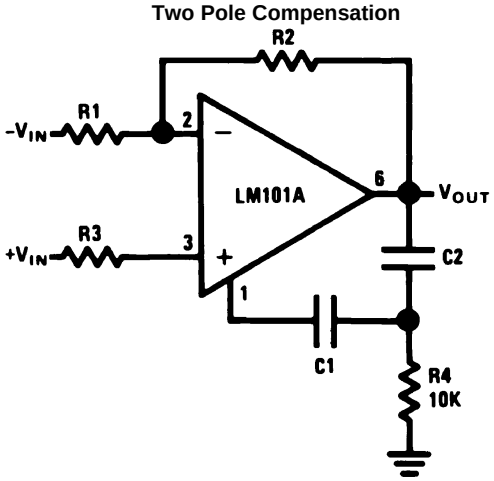

$$C1 \geq \frac{R1\,C_S}{R1 + R2}$$

C_S= 30 pF

C2 = 10 C1

Figure 18.

Feedforward Compensation

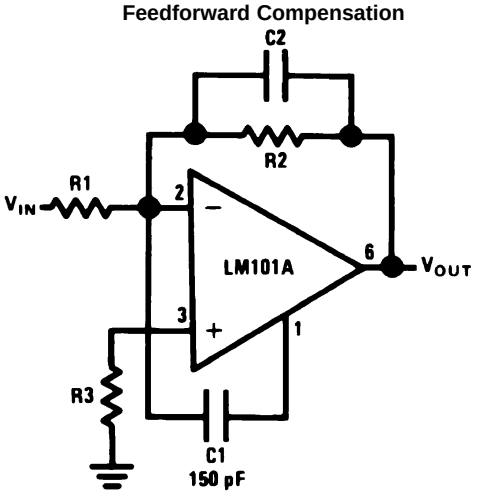

$$C2 = \frac{1}{2\pi\, f_o\, R2}$$

f_o= 3 MHz

Figure 19.

Open Loop Frequency Response

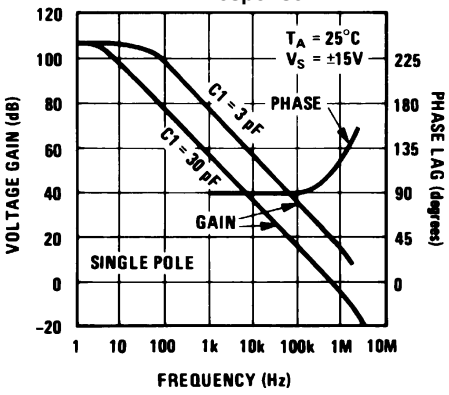

Figure 20.

Copyright © 2006–2013, Texas Instruments Incorporated

Downloaded From Oneyac.com

Typical Performance Characteristics for Various Compensation Circuits (continued)

Pin connections shown are for 8-pin packages.

Open Loop Frequency Response

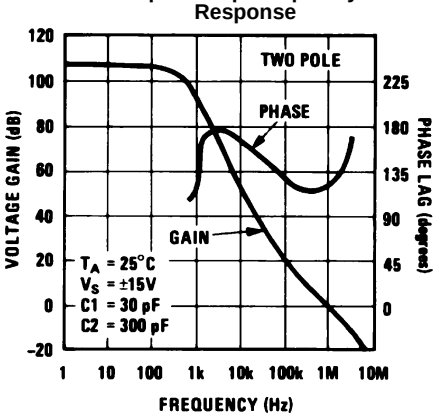

Figure 21.

Open Loop Frequency Response

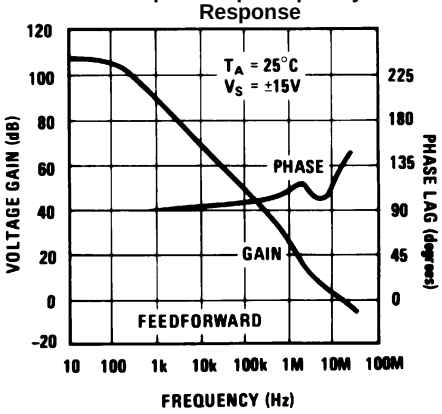

Figure 22.

Large Signal Frequency Response

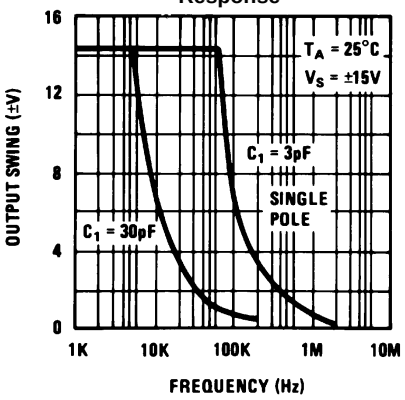

Figure 23.

Large Signal Frequency Response

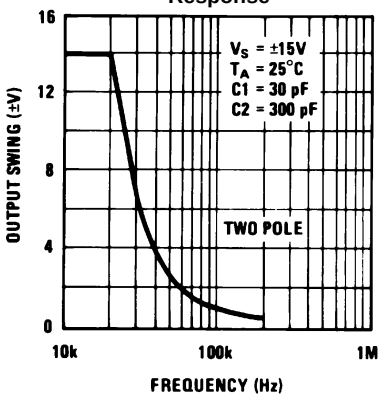

Figure 24.

Large Signal Frequency Response

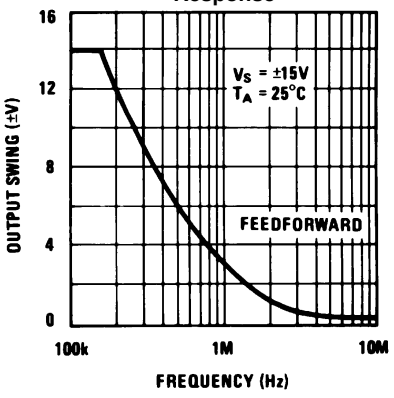

Figure 25.

Voltage Follower Pulse Response

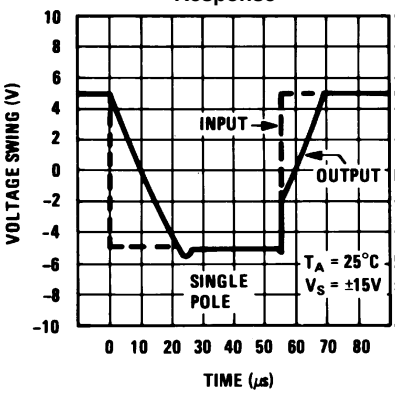

Figure 26.

Downloaded From Oneyac.com

Typical Performance Characteristics for Various Compensation Circuits (continued)

Pin connections shown are for 8-pin packages.

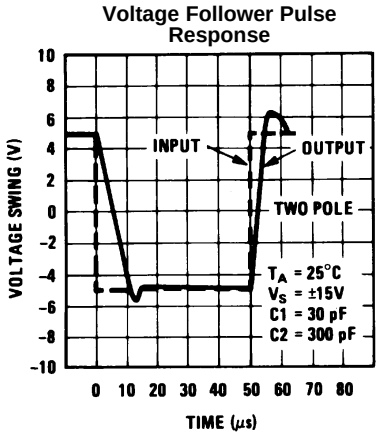

Figure 27.

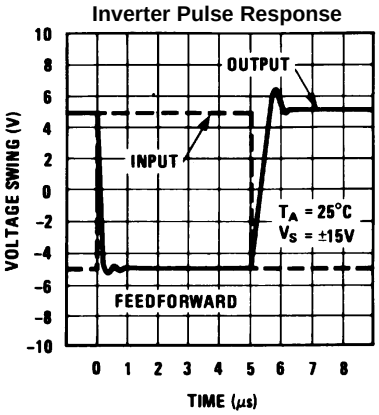

Figure 28.

Copyright © 2006–2013, Texas Instruments Incorporated

Downloaded From Oneyac.com

TYPICAL APPLICATIONS

Pin connections shown are for 8-pin packages.

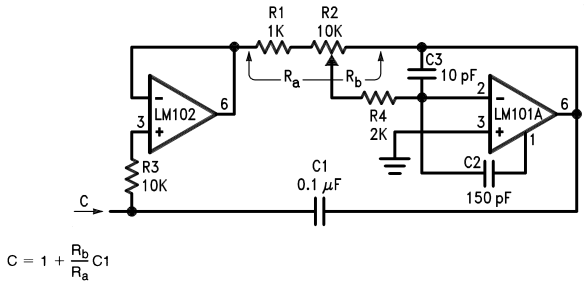

Figure 29. Variable Capacitance Multiplier

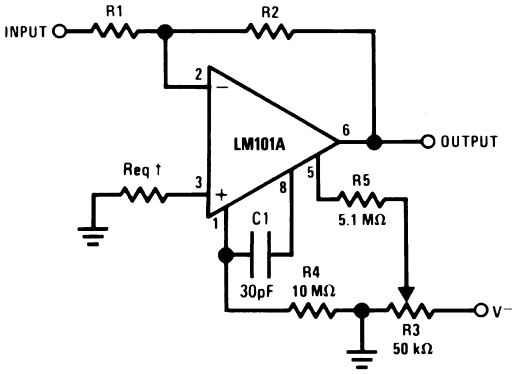

†May be zero or equal to parallel combination of R1 and R2 for minimum offset.

Figure 30. Inverting Amplifier with Balancing Circuit

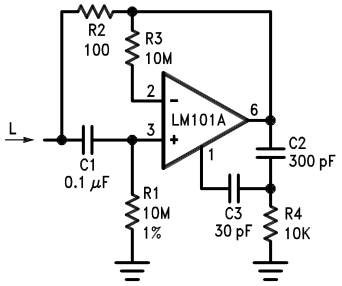

$L \simeq R1\ R2\ C1$

$R_S = R2$

$R_P = R1$

Figure 31. Simulated Inductor

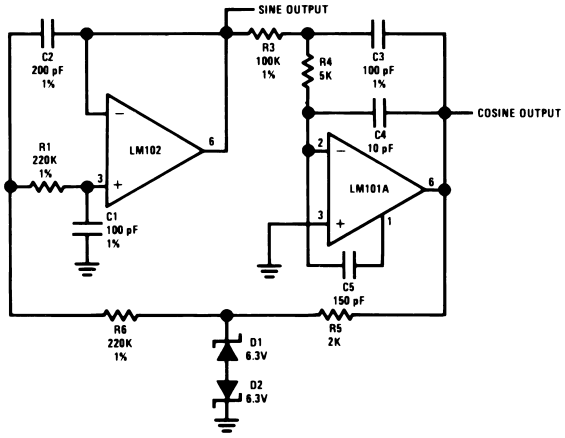

f_o = 10 kHz

Figure 32. Sine Wave Oscillator

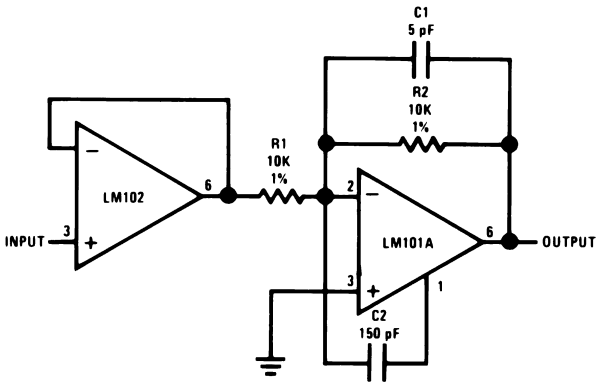

Figure 33. Fast Inverting Amplifier with High Input Impedance

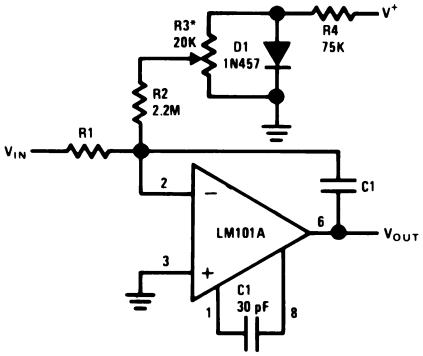

*Adjust for zero integrator drift. Current drift typically 0.1 nA/°C over −55°C to +125°C temperature range.

Figure 34. Integrator with Bias Current Compensation

Downloaded From Oneyac.com

Application Hints

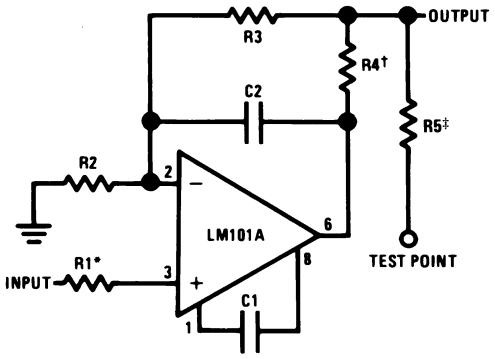

*Protects input
†Protects output
‡Protects output—not needed when R4 is used.

Figure 35. Protecting Against Gross Fault Conditions

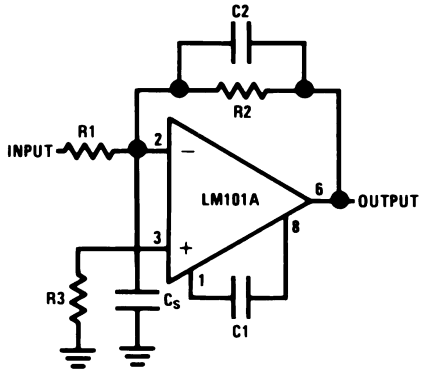

$$C2 = \frac{R1\,C_S}{R2}$$

Figure 36. Compensating for Stray Input Capacitances or Large Feedback Resistor

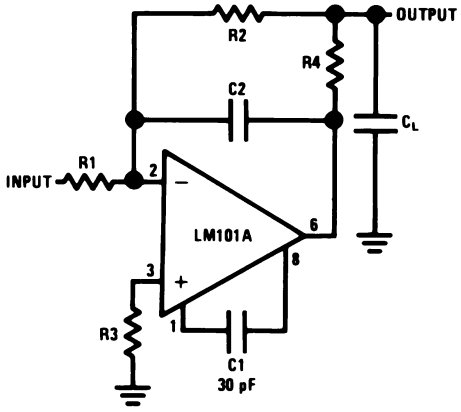

Figure 37. Isolating Large Capacitive Loads

Copyright © 2006–2013, Texas Instruments Incorporated

Downloaded From Oneyac.com

Although the LM101A is designed for trouble free operation, experience has indicated that it is wise to observe certain precautions given below to protect the devices from abnormal operating conditions. It might be pointed out that the advice given here is applicable to practically any IC op amp, although the exact reason why may differ with different devices.

When driving either input from a low-impedance source, a limiting resistor should be placed in series with the input lead to limit the peak instantaneous output current of the source to something less than 100 mA. This is especially important when the inputs go outside a piece of equipment where they could accidentally be connected to high voltage sources. Large capacitors on the input (greater than 0.1 µF) should be treated as a low source impedance and isolated with a resistor. Low impedance sources do not cause a problem unless their output voltage exceeds the supply voltage. However, the supplies go to zero when they are turned off, so the isolation is usually needed.

The output circuitry is protected against damage from shorts to ground. However, when the amplifier output is connected to a test point, it should be isolated by a limiting resistor, as test points frequently get shorted to bad places. Further, when the amplifer drives a load external to the equipment, it is also advisable to use some sort of limiting resistance to preclude mishaps.

Precautions should be taken to insure that the power supplies for the integrated circuit never become reversed—even under transient conditions. With reverse voltages greater than 1V, the IC will conduct excessive current, fusing internal aluminum interconnects. If there is a possibility of this happening, clamp diodes with a high peak current rating should be installed on the supply lines. Reversal of the voltage between V^+ and V^- will always cause a problem, although reversals with respect to ground may also give difficulties in many circuits.

The minimum values given for the frequency compensation capacitor are stable only for source resistances less than 10 kΩ, stray capacitances on the summing junction less than 5 pF and capacitive loads smaller than 100 pF. If any of these conditions are not met, it becomes necessary to overcompensate the amplifier with a larger compensation capacitor. Alternately, lead capacitors can be used in the feedback network to negate the effect of stray capacitance and large feedback resistors or an RC network can be added to isolate capacitive loads.

Although the LM101A is relatively unaffected by supply bypassing, this cannot be ignored altogether. Generally it is necessary to bypass the supplies to ground at least once on every circuit card, and more bypass points may be required if more than five amplifiers are used. When feed-forward compensation is employed, however, it is advisable to bypass the supply leads of each amplifier with low inductance capacitors because of the higher frequencies involved.

Typical Applications

Pin connections shown are for 8-pin packages.

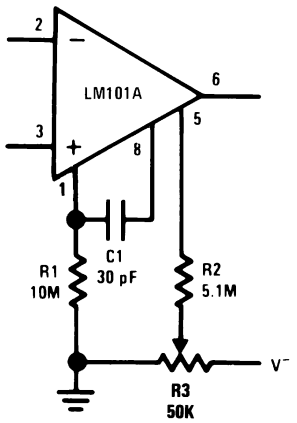

Figure 38. Standard Compensation and Offset Balancing Circuit

Downloaded From Oneyac.com

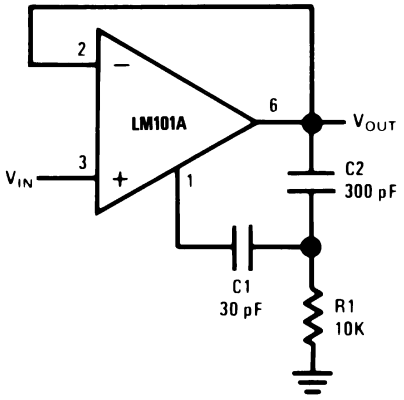

Power Bandwidth: 15 kHz
Slew Rate: 1V/μs

Figure 39. Fast Voltage Follower

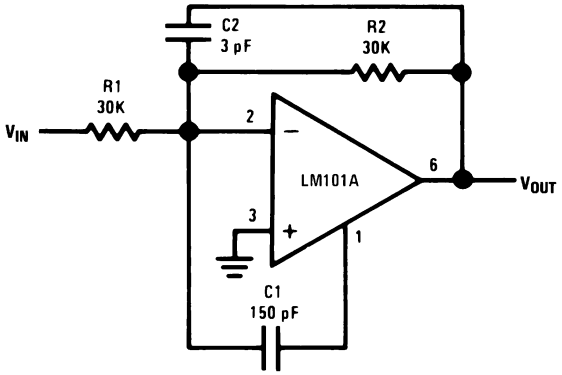

Power Bandwidth: 250 kHz
Small Signal Bandwiidth: 3.5 MHz
Slew Rate: 10V/μs

Figure 40. Fast Summing Amplifier

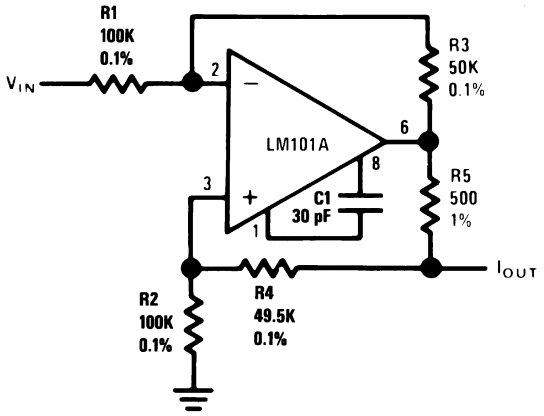

$$I_{OUT} = \frac{R3\ V_{IN}}{R1\ R5}$$

R3 = R4 + R5
R1 = R2

Figure 41. Bilateral Current Source

Copyright © 2006–2013, Texas Instruments Incorporated

Downloaded From Oneyac.com

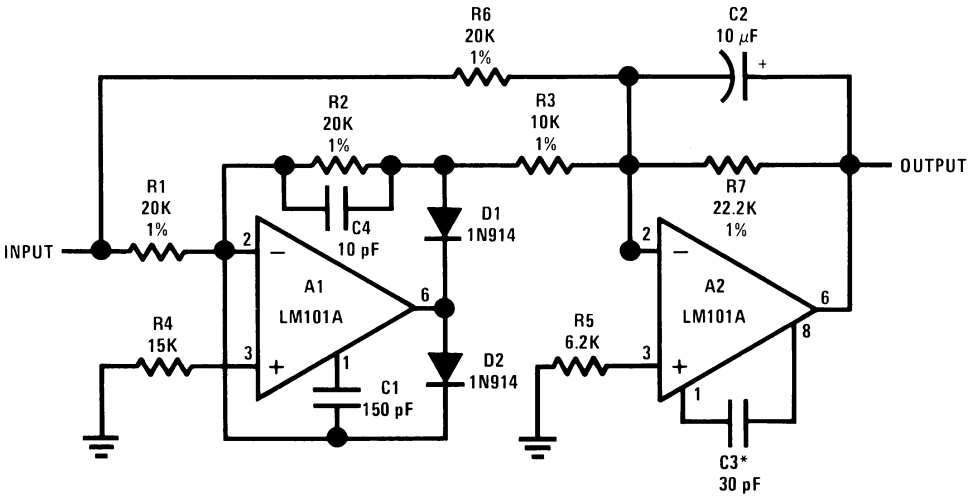

Note: Feedforward compensation can be used to make a fast full wave rectifier without a filter.

Figure 42. Fast AC/DC Converter

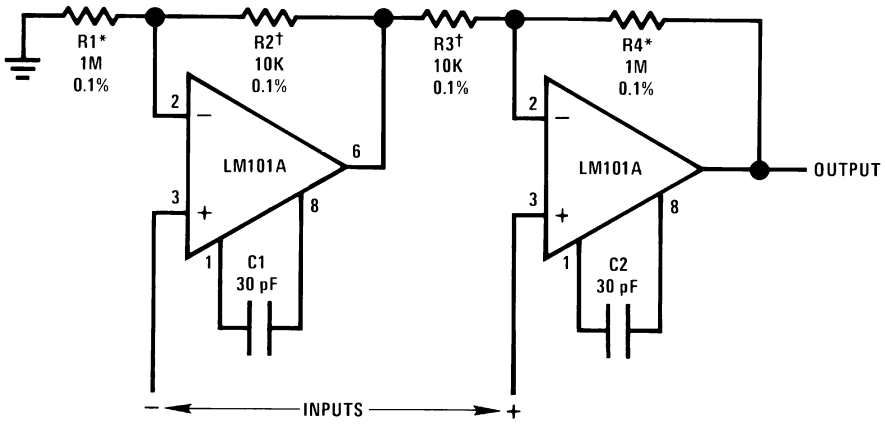

R1 = R4; R2 = R3

$$A_V = 1 + \frac{R1}{R2}$$

*,† Matching determines CMRR.

Figure 43. Instrumentation Amplifier

Downloaded From Oneyac.com

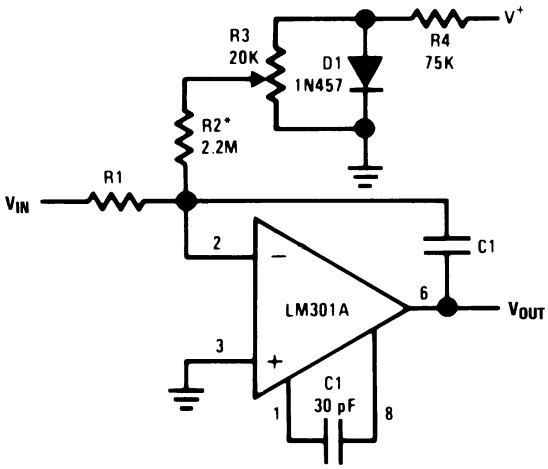

*Adjust for zero integrator drift. Current drift typically 0.1 nA/°C over 0°C to +70°C temperature range.

Figure 44. Integrator with Bias Current Compensation

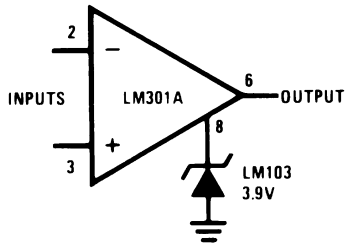

Figure 45. Voltage Comparator for Driving RTL Logic or High Current Driver

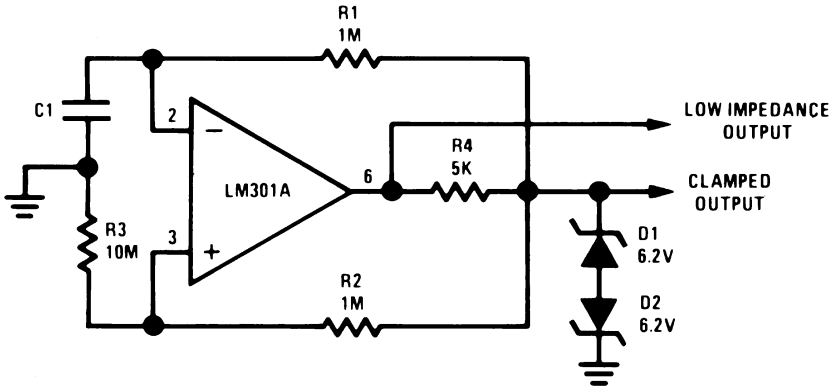

Figure 46. Low Frequency Square Wave Generator

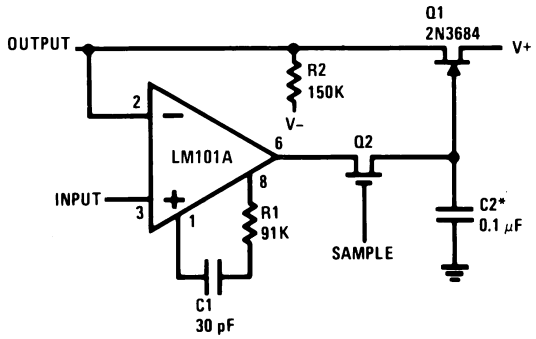

*Polycarbonate-dielectric capacitor

Figure 47. Low Drift Sample and Hold

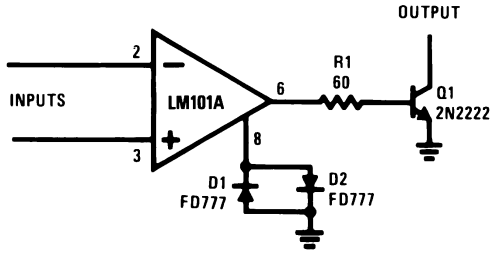

Figure 48. Voltage Comparator for Driving DTL or TTL Integrated Circuits

Copyright © 2006–2013, Texas Instruments Incorporated

Downloaded From Oneyac.com

REVISION HISTORY SECTION

Date Released	Revision	Section	Originator	Changes
01/05/06	A	New Release to corporate format	L. Lytle	2 MDS datasheets converted into one Corp. datasheet format. MNLM101A-X Rev 0A0 and MRLM101A-X-RH rev 1C2 MDS datasheets will be archived.
03/20/13	A	All	-	Changed layout of National Data Sheet to TI format

Copyright © 2006–2013, Texas Instruments Incorporated

Downloaded From Oneyac.com

PACKAGING INFORMATION

Orderable Device	Status (1)	Package Type	Package Drawing	Pins	Package Qty	Eco Plan (2)	Lead finish/ Ball material (6)	MSL Peak Temp (3)	Op Temp (°C)	Device Marking (4/5)	Samples
5962L9951501VGA	ACTIVE	TO-99	LMC	8	20	Non-RoHS & Non-Green	Call TI	Call TI	-55 to 125	LM101AHLQMLV 5962L9951501VGA Q ACO 5962L9951501VGA Q >T	Samples
5962L9951501VPA	ACTIVE	CDIP	NAB	8	40	Non-RoHS & Green	Call TI	Level-1-NA-UNLIM	-55 to 125	LM101AJLQMLV 5962L99515 01VPA Q ACO 01VPA Q >T	Samples
LM101 MDR	ACTIVE	DIESALE	Y	0	40	RoHS & Green	Call TI	Level-1-NA-UNLIM	-55 to 125		Samples
LM101A MD8	ACTIVE	DIESALE	Y	0	400	RoHS & Green	Call TI	Level-1-NA-UNLIM	-55 to 125		Samples
LM101AH/883	ACTIVE	TO-99	LMC	8	20	RoHS & Green	Call TI	Level-1-NA-UNLIM	-55 to 125	LM101AH/883 Q ACO LM101AH/883 Q >T	Samples
LM101AHLQMLV	ACTIVE	TO-99	LMC	8	20	Non-RoHS & Green	Call TI	Level-1-NA-UNLIM	-55 to 125	LM101AHLQMLV 5962L9951501VGA Q ACO 5962L9951501VGA Q >T	Samples
LM101AJ/883	ACTIVE	CDIP	NAB	8	40	Non-RoHS & Green	Call TI	Level-1-NA-UNLIM	-55 to 125	(LF412MJ, LM101AJ) /883 Q ACO /883 Q >T	Samples
LM101AJLQMLV	ACTIVE	CDIP	NAB	8	40	Non-RoHS & Green	Call TI	Level-1-NA-UNLIM	-55 to 125	LM101AJLQMLV 5962L99515 01VPA Q ACO 01VPA Q >T	Samples

(1) The marketing status values are defined as follows:
ACTIVE: Product device recommended for new designs.
LIFEBUY: TI has announced that the device will be discontinued, and a lifetime-buy period is in effect.
NRND: Not recommended for new designs. Device is in production to support existing customers, but TI does not recommend using this part in a new design.
PREVIEW: Device has been announced but is not in production. Samples may or may not be available.
OBSOLETE: TI has discontinued the production of the device.

Downloaded From Oneyac.com

(2) **RoHS:** TI defines "RoHS" to mean semiconductor products that are compliant with the current EU RoHS requirements for all 10 RoHS substances, including the requirement that RoHS substance do not exceed 0.1% by weight in homogeneous materials. Where designed to be soldered at high temperatures, "RoHS" products are suitable for use in specified lead-free processes. TI may reference these types of products as "Pb-Free".
RoHS Exempt: TI defines "RoHS Exempt" to mean products that contain lead but are compliant with EU RoHS pursuant to a specific EU RoHS exemption.
Green: TI defines "Green" to mean the content of Chlorine (Cl) and Bromine (Br) based flame retardants meet JS709B low halogen requirements of <=1000ppm threshold. Antimony trioxide based flame retardants must also meet the <=1000ppm threshold requirement.

(3) MSL, Peak Temp. - The Moisture Sensitivity Level rating according to the JEDEC industry standard classifications, and peak solder temperature.

(4) There may be additional marking, which relates to the logo, the lot trace code information, or the environmental category on the device.

(5) Multiple Device Markings will be inside parentheses. Only one Device Marking contained in parentheses and separated by a "~" will appear on a device. If a line is indented then it is a continuation of the previous line and the two combined represent the entire Device Marking for that device.

(6) Lead finish/Ball material - Orderable Devices may have multiple material finish options. Finish options are separated by a vertical ruled line. Lead finish/Ball material values may wrap to two lines if the finish value exceeds the maximum column width.

Important Information and Disclaimer: The information provided on this page represents TI's knowledge and belief as of the date that it is provided. TI bases its knowledge and belief on information provided by third parties, and makes no representation or warranty as to the accuracy of such information. Efforts are underway to better integrate information from third parties. TI has taken and continues to take reasonable steps to provide representative and accurate information but may not have conducted destructive testing or chemical analysis on incoming materials and chemicals. TI and TI suppliers consider certain information to be proprietary, and thus CAS numbers and other limited information may not be available for release.

In no event shall TI's liability arising out of such information exceed the total purchase price of the TI part(s) at issue in this document sold by TI to Customer on an annual basis.

OTHER QUALIFIED VERSIONS OF LM101AQML, LM101AQML-SP :

- Military : LM101AQML
- Space : LM101AQML-SP

NOTE: Qualified Version Definitions:

- Military - QML certified for Military and Defense Applications
- Space - Radiation tolerant, ceramic packaging and qualified for use in Space-based application

Downloaded From Oneyac.com

TUBE

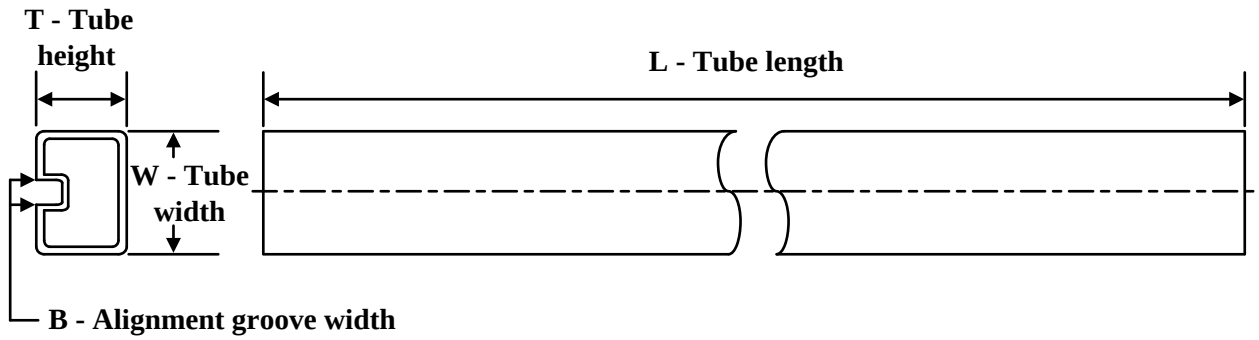

*All dimensions are nominal

Device	Package Name	Package Type	Pins	SPQ	L (mm)	W (mm)	T (µm)	B (mm)
5962L9951501VPA	NAB	CDIP	8	40	506.98	15.24	13440	NA
LM101AJ/883	NAB	CDIP	8	40	506.98	15.24	13440	NA
LM101AJLQMLV	NAB	CDIP	8	40	506.98	15.24	13440	NA

Downloaded From Oneyac.com

TRAY

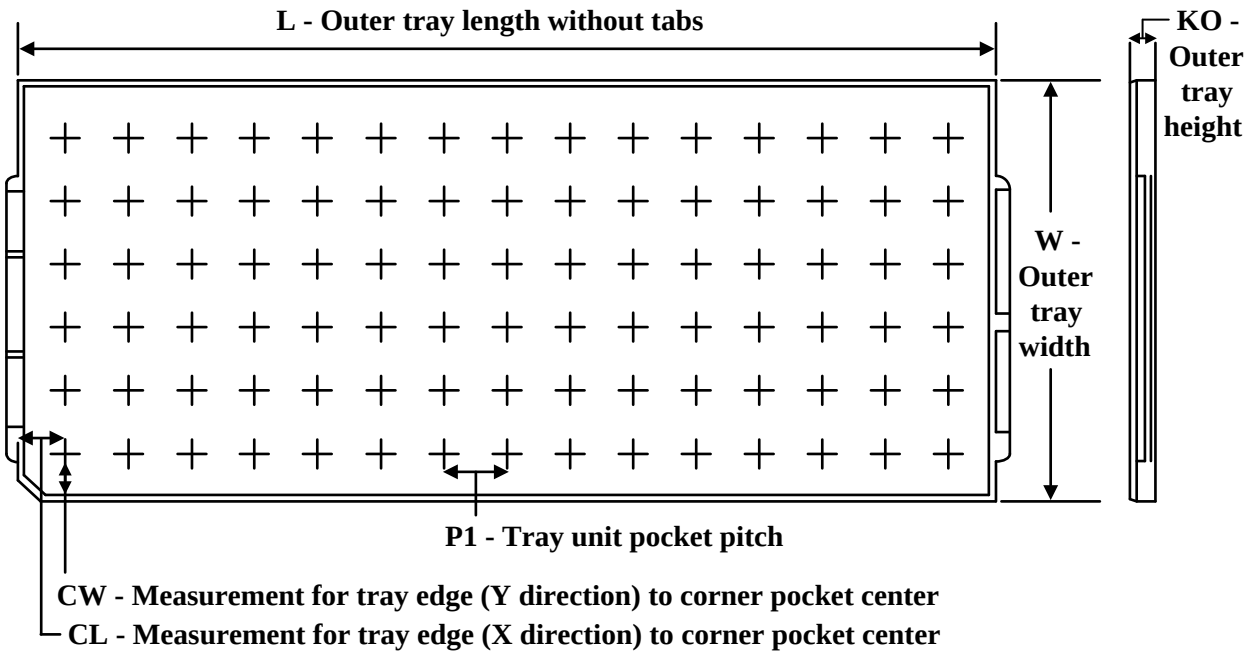

Chamfer on Tray corner indicates Pin 1 orientation of packed units.

*All dimensions are nominal

Device	Package Name	Package Type	Pins	SPQ	Unit array matrix	Max temperature (°C)	L (mm)	W (mm)	K0 (µm)	P1 (mm)	CL (mm)	CW (mm)
5962L9951501VGA	LMC	TO-CAN	8	20	2 X 10	150	126.49	61.98	8890	11.18	12.95	18.54
LM101AH/883	LMC	TO-CAN	8	20	2 X 10	150	126.49	61.98	8890	11.18	12.95	18.54
LM101AHLQMLV	LMC	TO-CAN	8	20	2 X 10	150	126.49	61.98	8890	11.18	12.95	18.54

Downloaded From Oneyac.com

LMC (O–MBCY–W8) METAL CYLINDRICAL PACKAGE

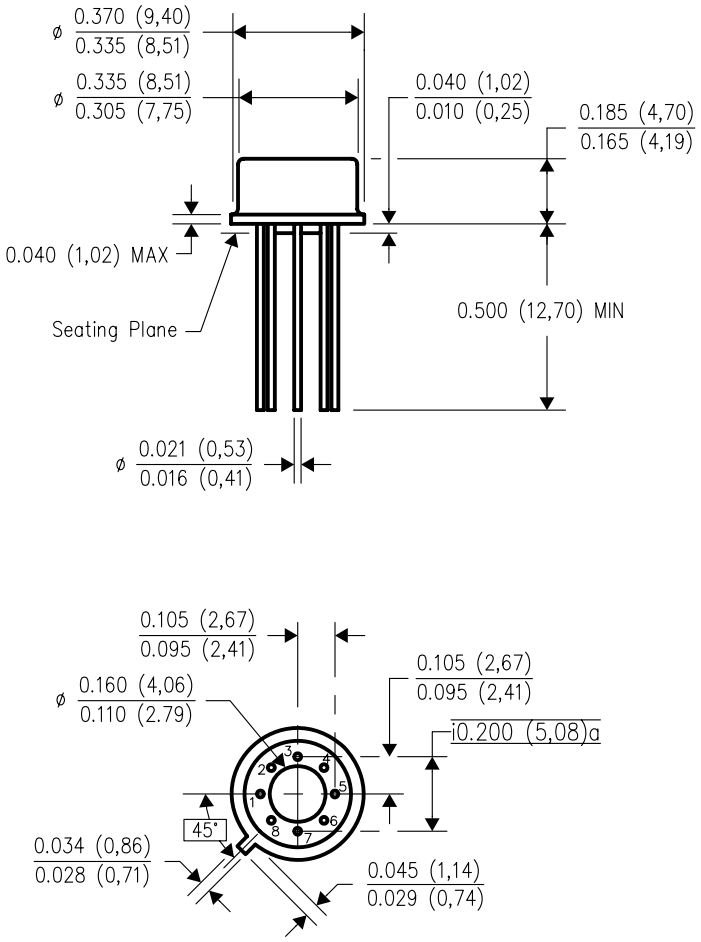

4202483/B 09/07

NOTES:
A. All linear dimensions are in inches (millimeters).
B. This drawing is subject to change without notice.
C. Leads in true position within 0.010 (0,25) R @ MMC at seating plane.
D. Pin numbers shown for reference only. Numbers may not be marked on package.
E. Falls within JEDEC MO–002/TO–99.

Downloaded From Oneyac.com

NAB0008A

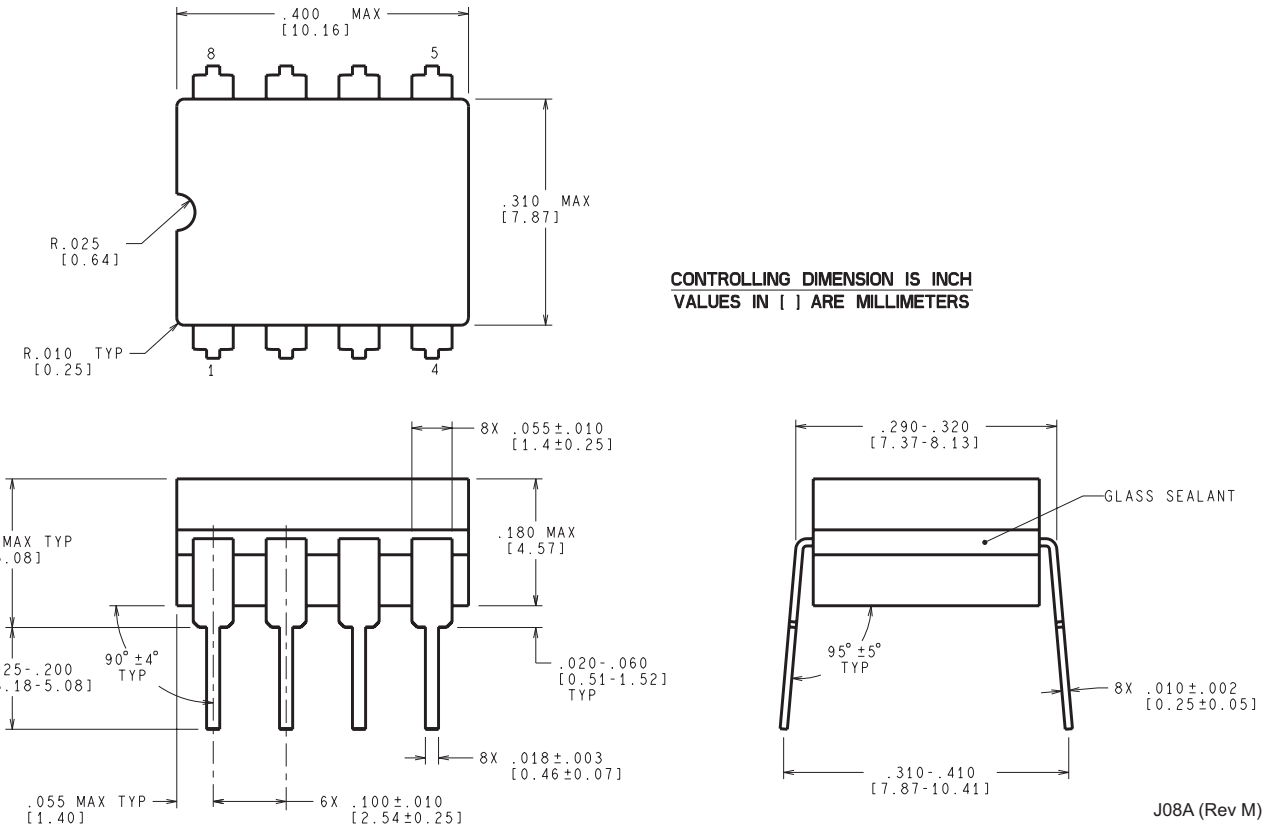

Downloaded From Oneyac.com

IMPORTANT NOTICE AND DISCLAIMER

TI PROVIDES TECHNICAL AND RELIABILITY DATA (INCLUDING DATA SHEETS), DESIGN RESOURCES (INCLUDING REFERENCE DESIGNS), APPLICATION OR OTHER DESIGN ADVICE, WEB TOOLS, SAFETY INFORMATION, AND OTHER RESOURCES “AS IS” AND WITH ALL FAULTS, AND DISCLAIMS ALL WARRANTIES, EXPRESS AND IMPLIED, INCLUDING WITHOUT LIMITATION ANY IMPLIED WARRANTIES OF MERCHANTABILITY, FITNESS FOR A PARTICULAR PURPOSE OR NON-INFRINGEMENT OF THIRD PARTY INTELLECTUAL PROPERTY RIGHTS.

These resources are intended for skilled developers designing with TI products. You are solely responsible for (1) selecting the appropriate TI products for your application, (2) designing, validating and testing your application, and (3) ensuring your application meets applicable standards, and any other safety, security, regulatory or other requirements.

These resources are subject to change without notice. TI grants you permission to use these resources only for development of an application that uses the TI products described in the resource. Other reproduction and display of these resources is prohibited. No license is granted to any other TI intellectual property right or to any third party intellectual property right. TI disclaims responsibility for, and you will fully indemnify TI and its representatives against, any claims, damages, costs, losses, and liabilities arising out of your use of these resources.

TI’s products are provided subject to TI’s Terms of Sale or other applicable terms available either on ti.com or provided in conjunction with such TI products. TI’s provision of these resources does not expand or otherwise alter TI’s applicable warranties or warranty disclaimers for TI products.

TI objects to and rejects any additional or different terms you may have proposed.

Mailing Address: Texas Instruments, Post Office Box 655303, Dallas, Texas 75265
Copyright © 2023, Texas Instruments Incorporated

Downloaded From Oneyac.com

单击下面可查看定价，库存，交付和生命周期等信息

>>TI(德州仪器)

Downloaded From Oneyac.com