SN65C3223E, SN75C3223E
3-V TO 5.5-V MULTICHANNEL RS-232 LINE DRIVERS/RECEIVERS WITH ±15-kV ESD PROTECTION

SLLS727A – MAY 2006 – REVISED JULY 2006

FEATURES

- **ESD Protection for RS-232 Bus Pins**
  - **±15-kV Human-Body Model (HBM)**
  - **±8-kV IEC 61000-4-2, Contact Discharge**
  - **±15-kV IEC 61000-4-2, Air-Gap Discharge**
- **Meet or Exceed the Requirements of TIA/EIA-232-F and ITU v.28 Standards**
- **Operate With 3-V to 5.5-V V_{CC} Supply**
- **Operate up to 1000 kbit/s**
- **Two Drivers and Two Receivers**
- **Low Standby Current . . . 1 μA Typ**
- **External Capacitors . . . 4 × 0.1 μF**
- **Accepts 5-V Logic Input With 3.3-V Supply**

APPLICATIONS

- **Battery-Powered Systems**
- **PDAs**
- **Notebooks**
- **Laptops**
- **Palmtop PCs**
- **Hand-Held Equipment**

DB, DW, OR PW PACKAGE
(TOP VIEW)

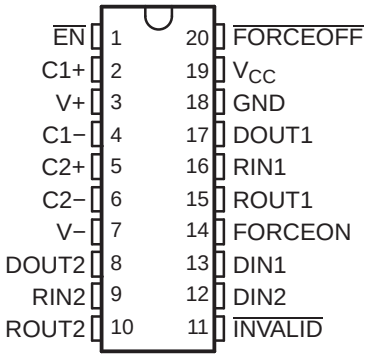

RHL PACKAGE
(TOP VIEW)

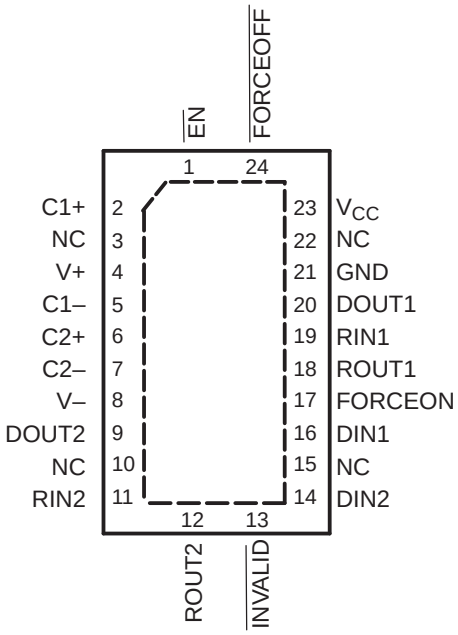

NC − No internal connection

DESCRIPTION/ORDERING INFORMATION

The SN65C3223E and SN75C3223E consist of two line drivers, two line receivers, and a dual charge-pump circuit with ±15-kV ESD protection pin to pin (serial-port connection pins, including GND). These devices meet the requirements of TIA/EIA-232-F and provide the electrical interface between an asynchronous communication controller and the serial-port connector. The charge pump and four small external capacitors allow operation from a single 3-V to 5.5-V supply. The devices operate at typical data signaling rates up to 1000 kbit/s.

Flexible control options for power management are available when the serial port is inactive. The auto-powerdown feature functions when FORCEON is low and $\overline{\text{FORCEOFF}}$ is high. During this mode of operation, if the devices do not sense a valid RS-232 signal, the driver outputs are disabled. If $\overline{\text{FORCEOFF}}$ is set low and EN is high, both drivers and receivers are shut off, and the supply current is reduced to 1 mA. Disconnecting the serial port or turning off the peripheral drivers causes auto-powerdown to occur. Auto-powerdown can be disabled when FORCEON and $\overline{\text{FORCEOFF}}$ are high. With auto-powerdown enabled, the devices are activated automatically when a valid signal is applied to any receiver input. The $\overline{\text{INVALID}}$ output is used to notify the user if an RS-232 signal is present at any receiver input. $\overline{\text{INVALID}}$ is high (valid data) if any receiver input voltage is greater than 2.7 V or less than –2.7 V, or has been between –0.3 V and 0.3 V for less than 30 μs. $\overline{\text{INVALID}}$ is low (invalid data) if the receiver input voltage is between –0.3 V and 0.3 V for more than 30 μs. Refer to Figure 4 for receiver input levels.

Please be aware that an important notice concerning availability, standard warranty, and use in critical applications of Texas Instruments semiconductor products and disclaimers thereto appears at the end of this data sheet.

PRODUCTION DATA information is current as of publication date. Products conform to specifications per the terms of the Texas Instruments standard warranty. Production processing does not necessarily include testing of all parameters.

Copyright © 2006, Texas Instruments Incorporated

Downloaded From Oneyac.com

ORDERING INFORMATION

T_A	PACKAGE(1)		ORDERABLE PART NUMBER	TOP-SIDE MARKING
0°C to 70°C	SOIC – DW	Tube of 25	SN75C3223EDW	75C3223E
		Reel of 2000	SN75C3223EDWR	
	SSOP – DB	Tube of 70	SN75C3223EDB	MY223E
		Reel of 2000	SN75C3223EDBR	
	TSSOP – PW	Tube of 70	SN75C3223EPW	MY223E
		Reel of 2000	SN75C3223EPWR	
–40°C to 85°C	SOIC – DW	Tube of 25	SN65C3223EDW	65C3223E
		Reel of 2000	SN65C3223EDWR	
	SSOP – DB	Tube of 70	SN65C3223EDB	MU223E
		Reel of 2000	SN65C3223EDBR	
	TSSOP – PW	Tube of 70	SN65C3223EPW	MU223E
		Reel of 2000	SN65C3223EPWR	

(1) Package drawings, standard packing quantities, thermal data, symbolization, and PCB design guidelines are available at www.ti.com/sc/package.

FUNCTION TABLES

Each Driver(1)

INPUTS				OUTPUT DOUT	DRIVER STATUS
DIN	FORCEON	$\overline{\text{FORCEOFF}}$	VALID RIN RS-232 LEVEL		
X	X	L	X	Z	Powered off
L	H	H	X	H	Normal operation with auto-powerdown disabled
H	H	H	X	L	
L	L	H	Yes	H	Normal operation with auto-powerdown enabled
H	L	H	Yes	L	
L	L	H	No	Z	Powered off by auto-powerdown feature
H	L	H	No	Z	

(1) H = high level, L = low level, X = irrelevant, Z = high impedance

Each Receiver(1)

INPUTS			OUTPUT DOUT
RIN	$\overline{\text{EN}}$	VALID RIN RS-232 LEVEL	
L	L	X	H
H	L	X	L
X	H	X	Z
Open	L	No	H

(1) H = high level, L = low level, X = irrelevant,
Z = high impedance (off),
Open = input disconnected or connected driver off

Downloaded From Oneyac.com

LOGIC DIAGRAM (POSITIVE LOGIC)

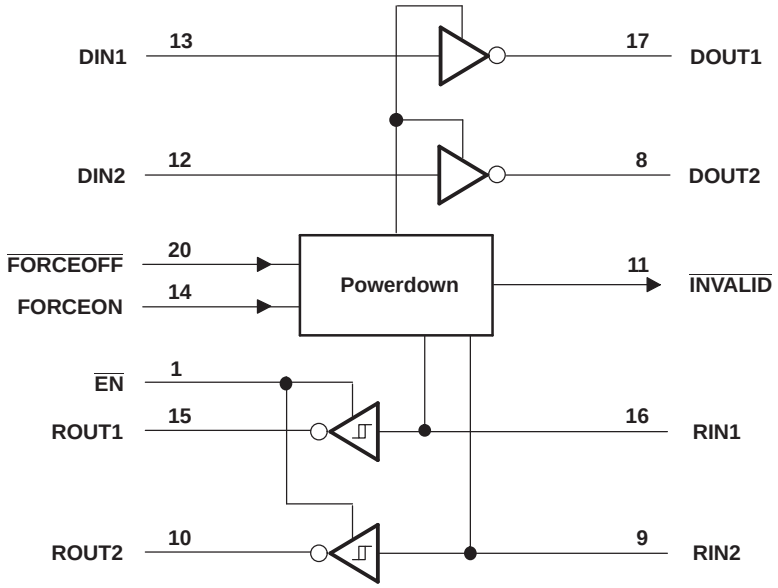

Pin numbers are for the DB, DW, and PW packages.

Absolute Maximum Ratings(1)

over operating free-air temperature range (unless otherwise noted)

			MIN	MAX	UNIT
V_{CC}	Supply voltage range		–0.3	6	V
V+	Positive-output supply voltage range(2)		–0.3	7	V
V–	Negative-output supply voltage range(2)		0.3	–7	V
V+ – V–	Supply voltage difference(2)			13	V
V_I	Input voltage range	Driver ($\overline{\text{FORCEOFF}}$, FORCEON, $\overline{\text{EN}}$)	–0.3	6	V
		Receiver	–25	25	
V_O	Output voltage range	Driver	–13.2	13.2	V
		Receiver ($\overline{\text{INVALID}}$)	–0.3	V_{CC} + 0.3	
θ_{JA}	Package thermal impedance(3)(4)	DB package		70	°C/W
		DW package		58	
		PW package		83	
		RHL package		TBD	
T_J	Operating virtual junction temperature			150	°C
T_{stg}	Storage temperature range		–65	150	°C

(1) Stresses beyond those listed under "absolute maximum ratings" may cause permanent damage to the device. These are stress ratings only, and functional operation of the device at these or any other conditions beyond those indicated under "recommended operating conditions" is not implied. Exposure to absolute-maximum-rated conditions for extended periods may affect device reliability.
(2) All voltages are with respect to network GND.
(3) Maximum power dissipation is a function of $T_J(max)$, θ_{JA}, and T_A. The maximum allowable power dissipation at any allowable ambient temperature is $P_D = (T_J(max) – T_A)/\theta_{JA}$. Operating at the absolute maximum T_J of 150°C can affect reliability.
(4) The package thermal impedance is calculated in accordance with JESD 51-7.

Downloaded From Oneyac.com

Recommended Operating Conditions[1]

See Figure 6

				MIN	NOM	MAX	UNIT
	Supply voltage		V_{CC} = 3.3 V	3	3.3	3.6	V
			V_{CC} = 5 V	4.5	5	5.5	
V_{IH}	Driver and control high-level input voltage	DIN, $\overline{EN}$, $\overline{FORCEOFF}$, FORCEON	V_{CC} = 3.3 V	2			V
			V_{CC} = 5 V	2.4			
V_{IL}	Driver and control low-level input voltage	DIN, $\overline{EN}$, $\overline{FORCEOFF}$, FORCEON				0.8	V
V_I	Driver and control input voltage	DIN, $\overline{EN}$, $\overline{FORCEOFF}$, FORCEON		0		5.5	V
	Receiver input voltage			–25		25	
T_A	Operating free-air temperature		SN75C3223E	0		70	°C
			SN65C3223E	–40		85	

(1) Test conditions are C1–C4 = 0.1 µF at V_{CC} = 3.3 V ± 0.3 V; C1 = 0.047 µF, C2–C4 = 0.33 µF at V_{CC} = 5 V ± 0.5 V.

Electrical Characteristics[1]

over recommended ranges of supply voltage and operating free-air temperature (unless otherwise noted) (see Figure 5)

PARAMETER			TEST CONDITIONS	MIN	TYP[2]	MAX	UNIT
I_I	Input leakage current	$\overline{EN}$, $\overline{FORCEOFF}$, FORCEON			±0.01	±1	µA
I_{CC}	Supply current	Auto-powerdown disabled	V_{CC} = 3.3 V or 5 V, T_A = 25°C, No load, $\overline{FORCEOFF}$ and FORCEON at V_{CC}		0.3	1	mA
		Powered off	No load, $\overline{FORCEOFF}$ at GND		1	10	µA
		Auto-powerdown enabled	No load, $\overline{FORCEOFF}$ at V_{CC}, FORCEON at GND, All RIN are open or grounded		1	10	

(1) Test conditions are C1–C4 = 0.1 µF at V_{CC} = 3.3 V ± 0.3 V; C1 = 0.047 µF, C2–C4 = 0.33 µF at V_{CC} = 5 V ± 0.5 V.
(2) All typical values are at V_{CC} = 3.3 V or V_{CC} = 5 V, and T_A = 25°C.

Downloaded From Oneyac.com

DRIVER SECTION

Electrical Characteristics(1)

over recommended ranges of supply voltage and operating free-air temperature (unless otherwise noted) (see Figure 5)

PARAMETER		TEST CONDITIONS	MIN	TYP(2)	MAX	UNIT
V_{OH}	High-level output voltage	DOUT at R_L = 3 kΩ to GND	5	5.4		V
V_{OL}	Low-level output voltage	DOUT at R_L = 3 kΩ to GND	–5	–5.4		V
I_{IH}	High-level input current	$V_I = V_{CC}$		±0.01	±1	µA
I_{IL}	Low-level input current	V_I at GND		±0.01	±1	µA
I_{OS}	Short-circuit output current(3)	V_{CC} = 3.6 V, V_O = 0 V		±35	±60	mA
		V_{CC} = 5.5 V, V_O = 0 V				
r_o	Output resistance	V_{CC}, V+, and V– = 0 V, V_O = ±2 V	300	10M		Ω
I_{OZ}	Output leakage current	$\overline{\text{FORCEOFF}}$ = GND, V_{CC} = 3 V to 3.6 V, V_O = ±12 V			±25	µA
		$\overline{\text{FORCEOFF}}$ = GND, V_{CC} = 4.5 V to 5.5 V, V_O = ±12 V			±25	

(1) Test conditions are C1–C4 = 0.1 µF at V_{CC} = 3.3 V ± 0.3 V; C1 = 0.047 µF, C2–C4 = 0.33 µF at V_{CC} = 5 V ± 0.5 V.
(2) All typical values are at V_{CC} = 3.3 V or V_{CC} = 5 V, and T_A = 25°C.
(3) Short-circuit durations should be controlled to prevent exceeding the device absolute power dissipation ratings, and not more than one output should be shorted at a time.

Switching Characteristics(1)

over recommended ranges of supply voltage and operating free-air temperature (unless otherwise noted) (see Figure 5)

PARAMETER		TEST CONDITIONS			MIN	TYP(2)	MAX	UNIT
	Maximum data rate (see Figure 1)	R_L = 3 kΩ, One DOUT switching	C_L = 1000 pF		250			kbit/s
			C_L = 250 pF,	V_{CC} = 3 V to 4.5 V	1000			
			C_L = 1000 pF,	V_{CC} = 4.5 V to 5.5 V	1000			
$t_{sk(p)}$	Pulse skew(3)	C_L = 150 pF to 2500 pF,	R_L = 3 kΩ to 7 kΩ,	See Figure 2		300		ns
SR(tr)	Slew rate, transition region (see Figure 1)	R_L = 7 kΩ,	C_L = 150 pF to 1000 pF		8		90	V/µs
		R_L = 3 kΩ	C_L = 1000 pF		12		60	
			C_L = 150 pF to 250 pF		24		150	

(1) Test conditions are C1–C4 = 0.1 µF at V_{CC} = 3.3 V ± 0.3 V; C1 = 0.047 µF, C2–C4 = 0.33 µF at V_{CC} = 5 V ± 0.5 V.
(2) All typical values are at V_{CC} = 3.3 V or V_{CC} = 5 V, and T_A = 25°C.
(3) Pulse skew is defined as $|t_{PLH} - t_{PHL}|$ of each channel of the same device.

Downloaded From Oneyac.com

RECEIVER SECTION

Electrical Characteristics(1)

over recommended ranges of supply voltage and operating free-air temperature (unless otherwise noted) (see Figure 6)

PARAMETER		TEST CONDITIONS	MIN	TYP(2)	MAX	UNIT
V_{OH}	High-level output voltage	I_{OH} = –1 mA	V_{CC} – 0.6	V_{CC} – 0.1		V
V_{OL}	Low-level output voltage	I_{OL} = 1.6 mA			0.4	V
V_{IT+}	Positive-going input threshold voltage	V_{CC} = 3.3 V		1.6	2.4	V
		V_{CC} = 5 V		1.9	2.4	
$V_{IT–}$	Negative-going input threshold voltage	V_{CC} = 3.3 V	0.6	1.1		V
		V_{CC} = 5 V	0.6	1.4		
V_{hys}	Input hysteresis ($V_{IT+} – V_{IT–}$)			0.5		V
I_{OZ}	Output leakage current	$\overline{EN}$ = V_{CC}		±0.05		µA
r_i	Input resistance	V_I = ±3 V to ±25 V	3	5		kΩ

(1) Test conditions are C1–C4 = 0.1 µF at V_{CC} = 3.3 V ± 0.3 V; C1 = 0.047 µF, C2–C4 = 0.33 µF at V_{CC} = 5 V ± 0.5 V.
(2) All typical values are at V_{CC} = 3.3 V or V_{CC} = 5 V, and T_A = 25°C.

Switching Characteristics(1)

over recommended ranges of supply voltage and operating free-air temperature (unless otherwise noted)

PARAMETER		TEST CONDITIONS	TYP(2)	UNIT
t_{PLH}	Propagation delay time, low- to high-level output	C_L = 150 pF, See Figure 3	150	ns
t_{PHL}	Propagation delay time, high- to low-level output	C_L = 150 pF, See Figure 3	150	ns
t_{en}	Output enable time	C_L = 150 pF, R_L = 3 kΩ, See Figure 4	200	ns
t_{dis}	Output disable time	C_L = 150 pF, R_L = 3 kΩ, See Figure 4	200	ns
$t_{sk(p)}$	Pulse skew(3)	See Figure 3	50	ns

(1) Test conditions are C1–C4 = 0.1 µF at V_{CC} = 3.3 V ± 0.3 V; C1 = 0.047 µF, C2–C4 = 0.33 µF at V_{CC} = 5 V ± 0.5 V.
(2) All typical values are at V_{CC} = 3.3 V or V_{CC} = 5 V, and T_A = 25°C.
(3) Pulse skew is defined as $|t_{PLH} – t_{PHL}|$ of each channel of the same device.

Downloaded From Oneyac.com

AUTO-POWERDOWN SECTION

Electrical Characteristics

over recommended ranges of supply voltage and operating free-air temperature (unless otherwise noted) (see Figure 5)

PARAMETER		TEST CONDITIONS		MIN	MAX	UNIT
$V_{T+(valid)}$	Receiver input threshold for $\overline{INVALID}$ high-level output voltage	FORCEON = GND,	$\overline{FORCEOFF}$ = V_{CC}		2.7	V
$V_{T(valid)}$	Receiver input threshold for $\overline{INVALID}$ high-level output voltage	FORCEON = GND,	$\overline{FORCEOFF}$ = V_{CC}	–2.7		V
$V_{T(invalid)}$	Receiver input threshold for $\overline{INVALID}$ low-level output voltage	FORCEON = GND,	$\overline{FORCEOFF}$ = V_{CC}	–0.3	0.3	V
V_{OH}	$\overline{INVALID}$ high-level output voltage	I_{OH} = 1 mA, $\overline{FORCEOFF}$ = V_{CC}	FORCEON = GND,	V_{CC} – 0.6		V
V_{OL}	$\overline{INVALID}$ low-level output voltage	I_{OL} = 1.6 mA, $\overline{FORCEOFF}$ = V_{CC}	FORCEON = GND,		0.4	V

Switching Characteristics

over recommended ranges of supply voltage and operating free-air temperature (unless otherwise noted) (see Figure 5)

PARAMETER		TYP(1)	UNIT
t_{valid}	Propagation delay time, low- to high-level output	1	µs
$t_{invalid}$	Propagation delay time, high- to low-level output	30	µs
t_{en}	Supply enable time	100	µs

(1) All typical values are at V_{CC} = 3.3 V or V_{CC} = 5 V, and T_A = 25°C.

Downloaded From Oneyac.com

PARAMETER MEASUREMENT INFORMATION

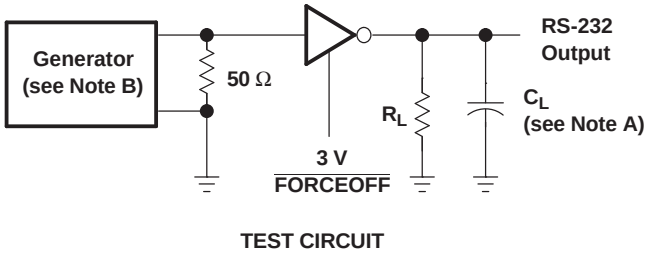

TEST CIRCUIT

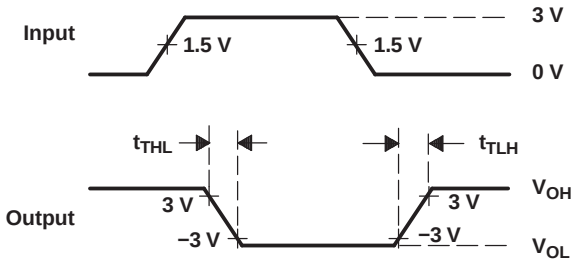

VOLTAGE WAVEFORMS

$$SR(tr) = \frac{6\ V}{t_{THL} \text{ or } t_{TLH}}$$

A. C_L includes probe and jig capacitance.

B. The pulse generator has the following characteristics: PRR = 250 kbit/s, Z_O = 50 Ω, 50% duty cycle, $t_r \le 10$ ns, $t_f \le 10$ ns.

Figure 1. Driver Slew Rate

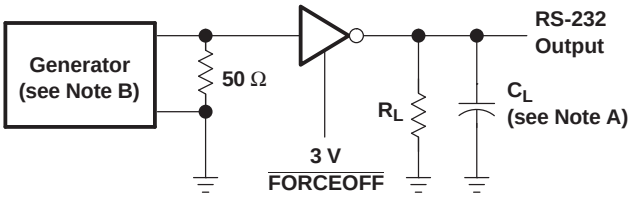

TEST CIRCUIT

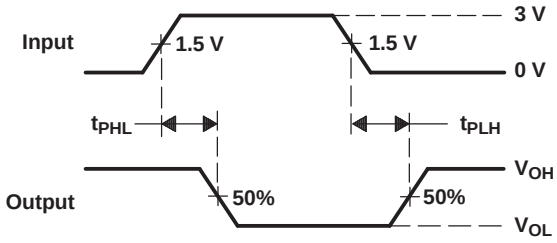

VOLTAGE WAVEFORMS

A. C_L includes probe and jig capacitance.

B. The pulse generator has the following characteristics: PRR = 250 kbit/s, Z_O = 50 Ω, 50% duty cycle, $t_r \le 10$ ns, $t_f \le 10$ ns.

Figure 2. Driver Pulse Skew

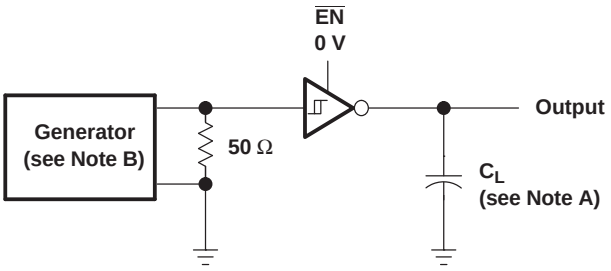

TEST CIRCUIT

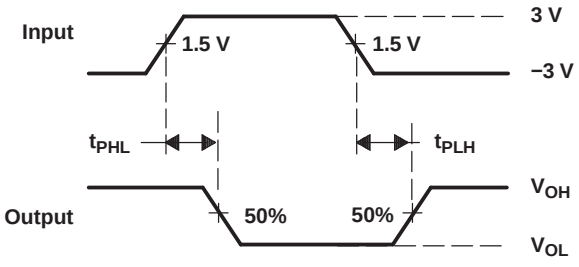

VOLTAGE WAVEFORMS

A. C_L includes probe and jig capacitance.

B. The pulse generator has the following characteristics: Z_O = 50 Ω, 50% duty cycle, $t_r \le 10$ ns, $t_f \le 10$ ns.

Figure 3. Receiver Propagation Delay Times

Downloaded From Oneyac.com

PARAMETER MEASUREMENT INFORMATION (continued)

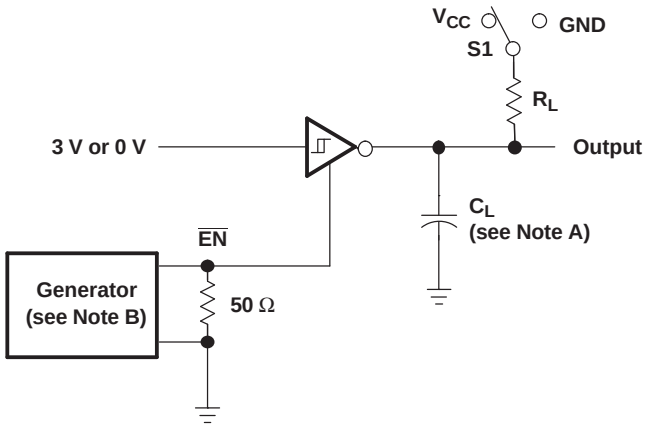

TEST CIRCUIT

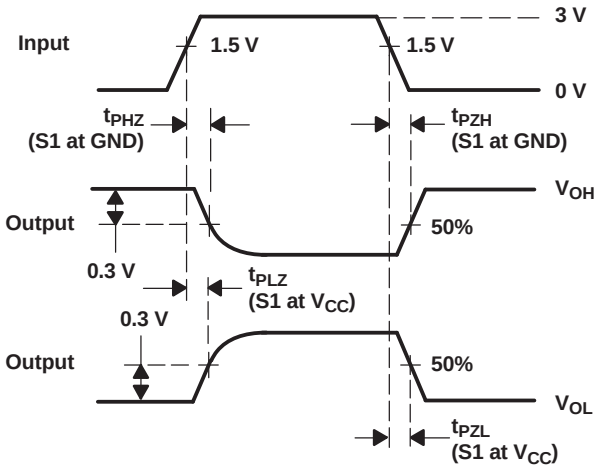

VOLTAGE WAVEFORMS

A. C_L includes probe and jig capacitance.

B. The pulse generator has the following characteristics: Z_O = 50 Ω, 50% duty cycle, $t_r \le 10$ ns, $t_f \le 10$ ns.

Figure 4. Receiver Enable and Disable Times

Downloaded From Oneyac.com

PARAMETER MEASUREMENT INFORMATION (continued)

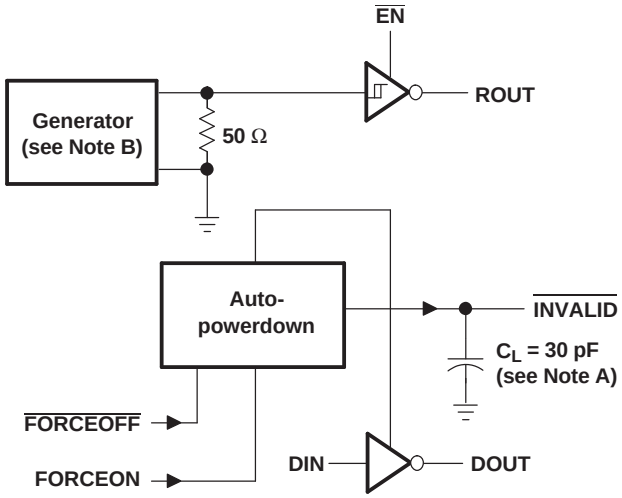

TEST CIRCUIT

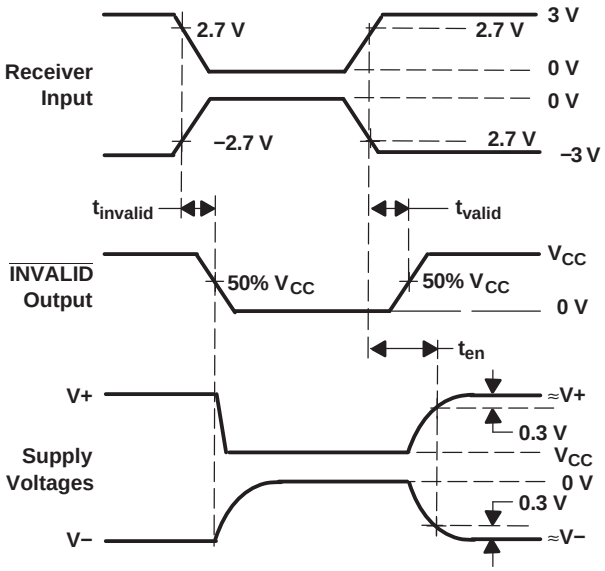

VOLTAGE WAVEFORMS

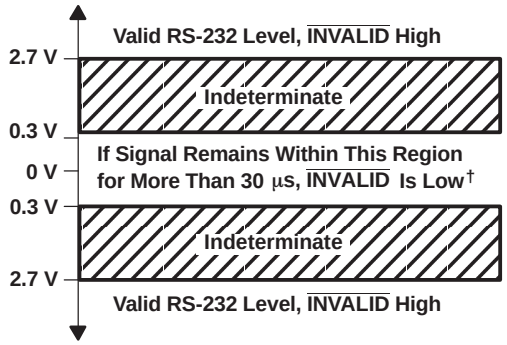

† Auto-powerdown disables drivers and reduces supply current to 1 μA

A. C_L includes probe and jig capacitance.

B. The pulse generator has the following characteristics: PRR = 250 kbit/s, Z_O = 50 Ω, 50% duty cycle, $t_r \le 10$ ns, $t_f \le 10$ ns.

Figure 5. INVALID Propagation Delay Times and Supply Enabling Time

Downloaded From Oneyac.com

APPLICATION INFORMATION

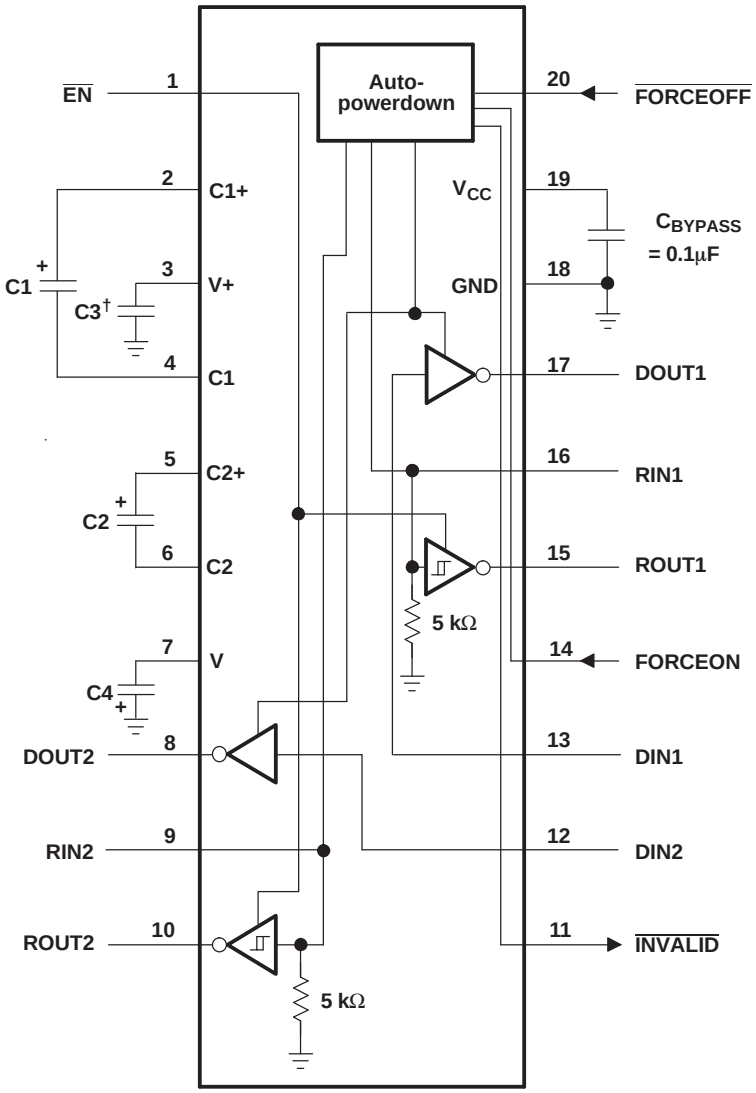

† C3 can be connected to V_{CC} or GND.

NOTES: A. Resistor values shown are nominal.

B. Nonpolarized ceramic capacitors are acceptable. If polarized tantalum or electrolytic capacitors are used, they should be connected as shown.

V_{CC} vs CAPACITOR VALUES

V_{CC}	C1	C2, C3, and C4
3.3 V ± 0.3 V	0.1 µF	0.1 µF
5 V ± 0.5 V	0.047 µF	0.33 µF
3 V to 5.5 V	0.1 µF	0.47 µF

Figure 6. Typical Operating Circuit and Capacitor Values

Downloaded From Oneyac.com

PACKAGING INFORMATION

Orderable Device	Status (1)	Package Type	Package Drawing	Pins	Package Qty	Eco Plan (2)	Lead finish/ Ball material (6)	MSL Peak Temp (3)	Op Temp (°C)	Device Marking (4/5)	Samples
SN65C3223EDBR	LIFEBUY	SSOP	DB	20	2000	RoHS & Green	NIPDAU	Level-1-260C-UNLIM	-40 to 85	MU223E	
SN65C3223EDW	LIFEBUY	SOIC	DW	20	25	RoHS & Green	NIPDAU	Level-1-260C-UNLIM	-40 to 85	65C3223E	
SN65C3223EDWR	LIFEBUY	SOIC	DW	20	2000	RoHS & Green	NIPDAU	Level-1-260C-UNLIM	-40 to 85	65C3223E	
SN65C3223EPW	LIFEBUY	TSSOP	PW	20	70	RoHS & Green	NIPDAU	Level-1-260C-UNLIM	-40 to 85	MU223E	
SN65C3223EPWR	LIFEBUY	TSSOP	PW	20	2000	RoHS & Green	NIPDAU	Level-1-260C-UNLIM	-40 to 85	MU223E	
SN75C3223EDB	LIFEBUY	SSOP	DB	20	70	RoHS & Green	NIPDAU	Level-1-260C-UNLIM	0 to 70	MY223E	
SN75C3223EDBR	LIFEBUY	SSOP	DB	20	2000	RoHS & Green	NIPDAU	Level-1-260C-UNLIM	0 to 70	MY223E	
SN75C3223EDWR	LIFEBUY	SOIC	DW	20	2000	RoHS & Green	NIPDAU	Level-1-260C-UNLIM	0 to 70	75C3223E	
SN75C3223EPW	LIFEBUY	TSSOP	PW	20	70	RoHS & Green	NIPDAU	Level-1-260C-UNLIM	0 to 70	MY223E	
SN75C3223EPWR	LIFEBUY	TSSOP	PW	20	2000	RoHS & Green	NIPDAU	Level-1-260C-UNLIM	0 to 70	MY223E	

(1) The marketing status values are defined as follows:
ACTIVE: Product device recommended for new designs.
LIFEBUY: TI has announced that the device will be discontinued, and a lifetime-buy period is in effect.
NRND: Not recommended for new designs. Device is in production to support existing customers, but TI does not recommend using this part in a new design.
PREVIEW: Device has been announced but is not in production. Samples may or may not be available.
OBSOLETE: TI has discontinued the production of the device.

(2) **RoHS:** TI defines "RoHS" to mean semiconductor products that are compliant with the current EU RoHS requirements for all 10 RoHS substances, including the requirement that RoHS substance do not exceed 0.1% by weight in homogeneous materials. Where designed to be soldered at high temperatures, "RoHS" products are suitable for use in specified lead-free processes. TI may reference these types of products as "Pb-Free".
RoHS Exempt: TI defines "RoHS Exempt" to mean products that contain lead but are compliant with EU RoHS pursuant to a specific EU RoHS exemption.
Green: TI defines "Green" to mean the content of Chlorine (Cl) and Bromine (Br) based flame retardants meet JS709B low halogen requirements of <=1000ppm threshold. Antimony trioxide based flame retardants must also meet the <=1000ppm threshold requirement.

(3) MSL, Peak Temp. - The Moisture Sensitivity Level rating according to the JEDEC industry standard classifications, and peak solder temperature.

(4) There may be additional marking, which relates to the logo, the lot trace code information, or the environmental category on the device.

(5) Multiple Device Markings will be inside parentheses. Only one Device Marking contained in parentheses and separated by a "~" will appear on a device. If a line is indented then it is a continuation of the previous line and the two combined represent the entire Device Marking for that device.

Downloaded From Oneyac.com

(6) Lead finish/Ball material - Orderable Devices may have multiple material finish options. Finish options are separated by a vertical ruled line. Lead finish/Ball material values may wrap to two lines if the finish value exceeds the maximum column width.

Important Information and Disclaimer: The information provided on this page represents TI's knowledge and belief as of the date that it is provided. TI bases its knowledge and belief on information provided by third parties, and makes no representation or warranty as to the accuracy of such information. Efforts are underway to better integrate information from third parties. TI has taken and continues to take reasonable steps to provide representative and accurate information but may not have conducted destructive testing or chemical analysis on incoming materials and chemicals. TI and TI suppliers consider certain information to be proprietary, and thus CAS numbers and other limited information may not be available for release.

In no event shall TI's liability arising out of such information exceed the total purchase price of the TI part(s) at issue in this document sold by TI to Customer on an annual basis.

Downloaded From Oneyac.com

TAPE AND REEL INFORMATION

REEL DIMENSIONS

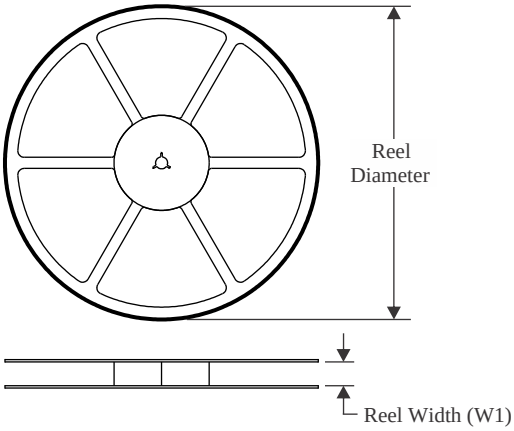

TAPE DIMENSIONS

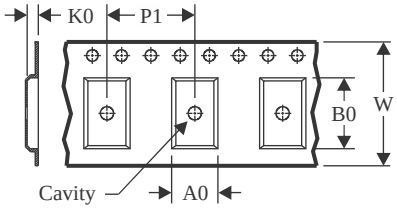

A0	Dimension designed to accommodate the component width
B0	Dimension designed to accommodate the component length
K0	Dimension designed to accommodate the component thickness
W	Overall width of the carrier tape
P1	Pitch between successive cavity centers

QUADRANT ASSIGNMENTS FOR PIN 1 ORIENTATION IN TAPE

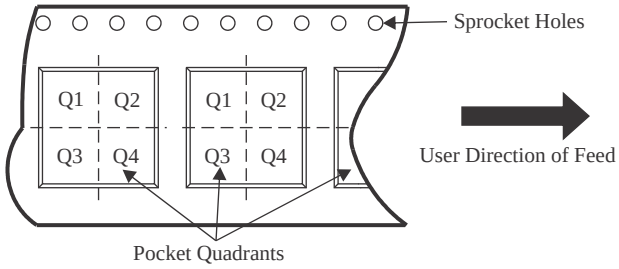

*All dimensions are nominal

Device	Package Type	Package Drawing	Pins	SPQ	Reel Diameter (mm)	Reel Width W1 (mm)	A0 (mm)	B0 (mm)	K0 (mm)	P1 (mm)	W (mm)	Pin1 Quadrant
SN65C3223EDBR	SSOP	DB	20	2000	330.0	16.4	8.2	7.5	2.5	12.0	16.0	Q1
SN65C3223EDWR	SOIC	DW	20	2000	330.0	24.4	10.8	13.3	2.7	12.0	24.0	Q1
SN65C3223EPWR	TSSOP	PW	20	2000	330.0	16.4	6.95	7.1	1.6	8.0	16.0	Q1
SN75C3223EDBR	SSOP	DB	20	2000	330.0	16.4	8.2	7.5	2.5	12.0	16.0	Q1
SN75C3223EDWR	SOIC	DW	20	2000	330.0	24.4	10.8	13.3	2.7	12.0	24.0	Q1
SN75C3223EPWR	TSSOP	PW	20	2000	330.0	16.4	6.95	7.1	1.6	8.0	16.0	Q1

Downloaded From Oneyac.com

TAPE AND REEL BOX DIMENSIONS

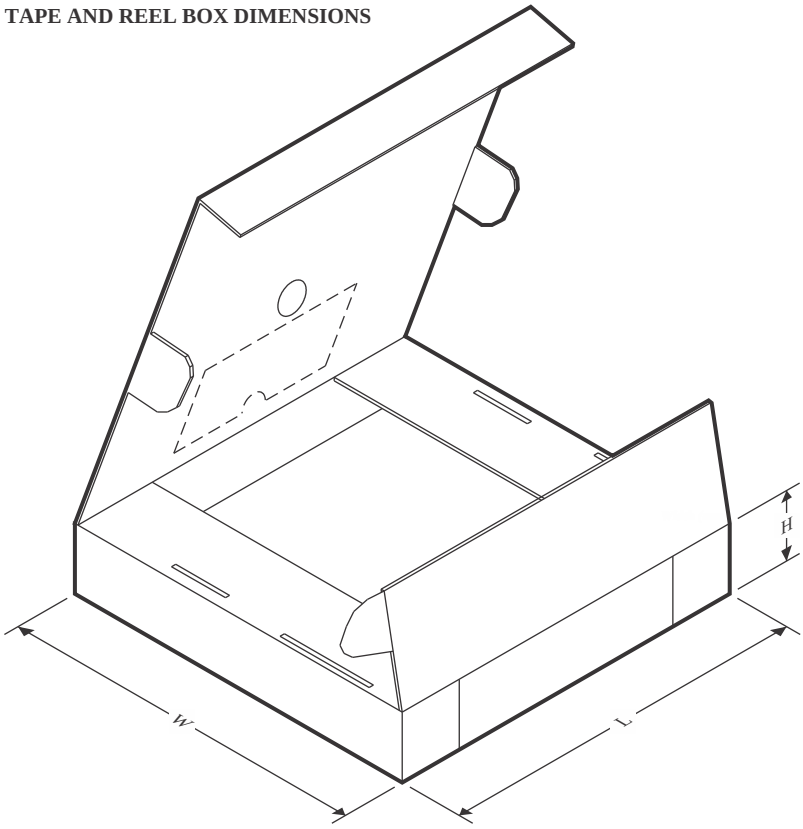

*All dimensions are nominal

Device	Package Type	Package Drawing	Pins	SPQ	Length (mm)	Width (mm)	Height (mm)
SN65C3223EDBR	SSOP	DB	20	2000	356.0	356.0	35.0
SN65C3223EDWR	SOIC	DW	20	2000	367.0	367.0	45.0
SN65C3223EPWR	TSSOP	PW	20	2000	356.0	356.0	35.0
SN75C3223EDBR	SSOP	DB	20	2000	356.0	356.0	35.0
SN75C3223EDWR	SOIC	DW	20	2000	367.0	367.0	45.0
SN75C3223EPWR	TSSOP	PW	20	2000	356.0	356.0	35.0

Downloaded From Oneyac.com

TUBE

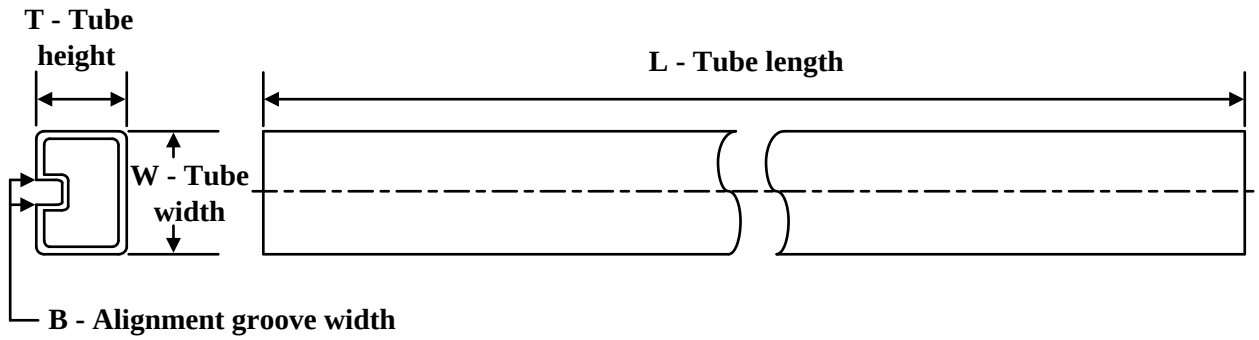

*All dimensions are nominal

Device	Package Name	Package Type	Pins	SPQ	L (mm)	W (mm)	T (µm)	B (mm)
SN65C3223EDW	DW	SOIC	20	25	507	12.83	5080	6.6
SN65C3223EPW	PW	TSSOP	20	70	530	10.2	3600	3.5
SN75C3223EDB	DB	SSOP	20	70	530	10.5	4000	4.1
SN75C3223EPW	PW	TSSOP	20	70	530	10.2	3600	3.5

Downloaded From Oneyac.com

PACKAGE OUTLINE

PW0020A

TSSOP - 1.2 mm max height

SMALL OUTLINE PACKAGE

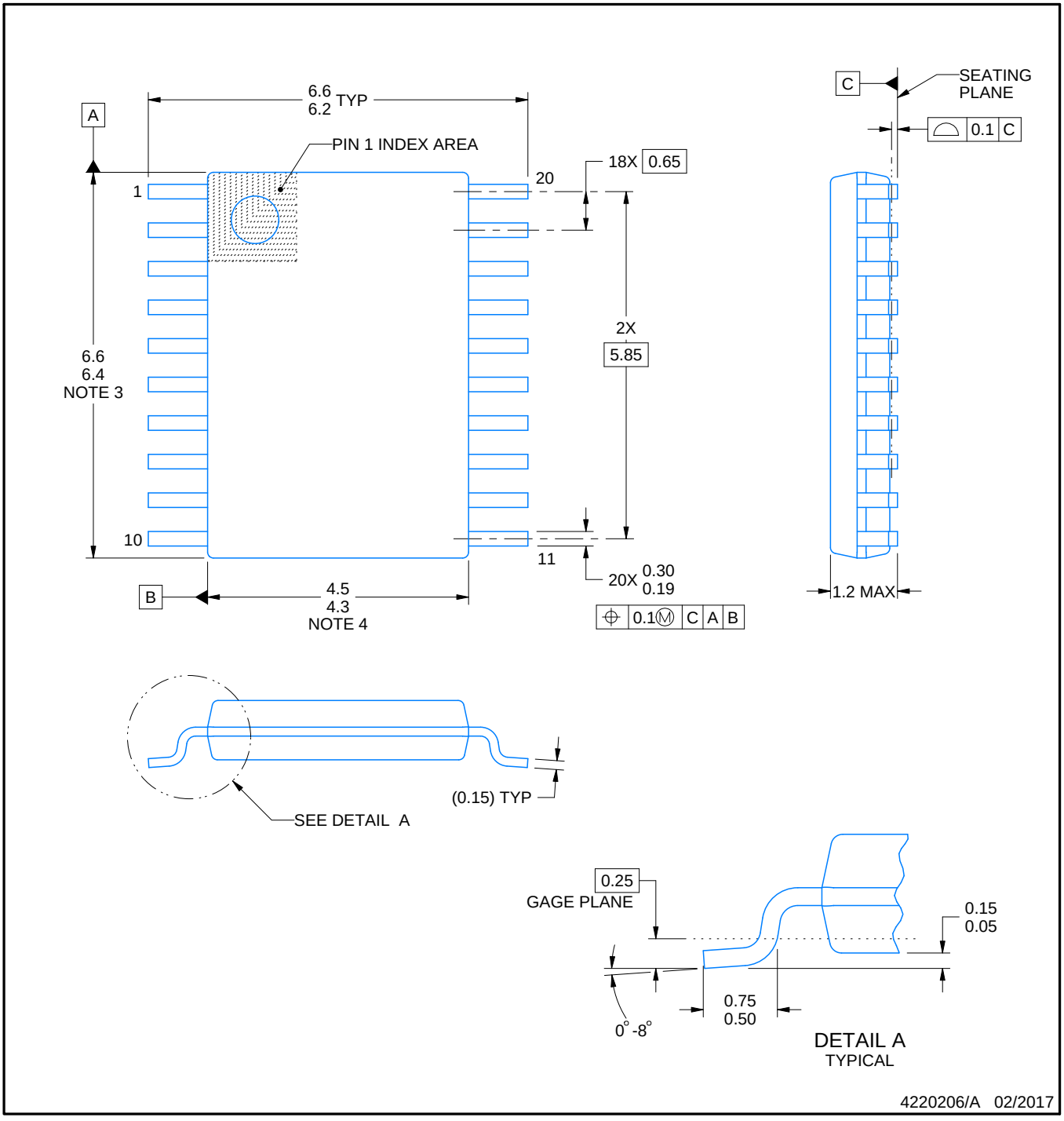

NOTES:

1. All linear dimensions are in millimeters. Any dimensions in parenthesis are for reference only. Dimensioning and tolerancing per ASME Y14.5M.
2. This drawing is subject to change without notice.
3. This dimension does not include mold flash, protrusions, or gate burrs. Mold flash, protrusions, or gate burrs shall not exceed 0.15 mm per side.
4. This dimension does not include interlead flash. Interlead flash shall not exceed 0.25 mm per side.
5. Reference JEDEC registration MO-153.

Texas Instruments

Downloaded From Oneyac.com

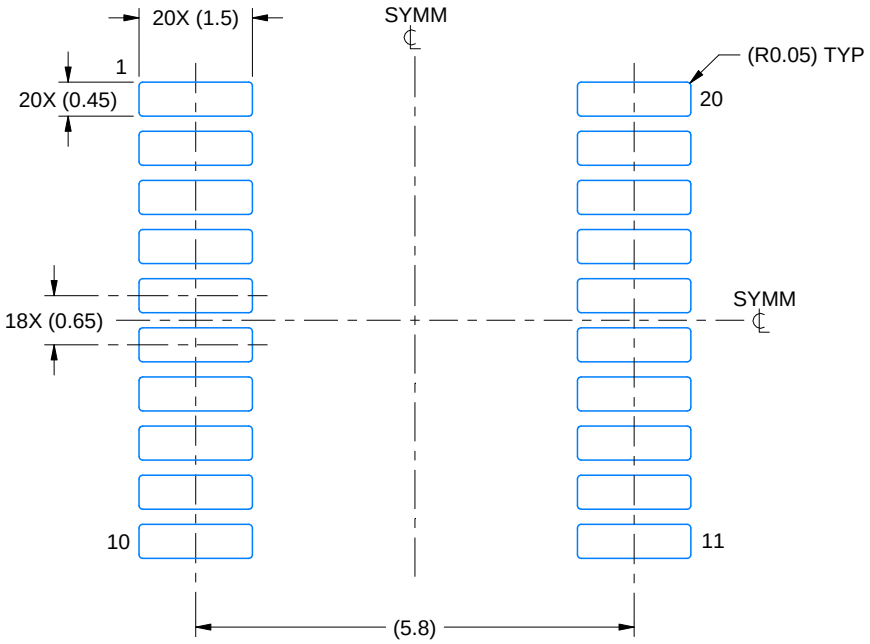

LAND PATTERN EXAMPLE
EXPOSED METAL SHOWN
SCALE: 10X



SOLDER MASK DETAILS

4220206/A 02/2017

NOTES: (continued)

6. Publication IPC-7351 may have alternate designs.
7. Solder mask tolerances between and around signal pads can vary based on board fabrication site.

Texas Instruments

Downloaded From Oneyac.com

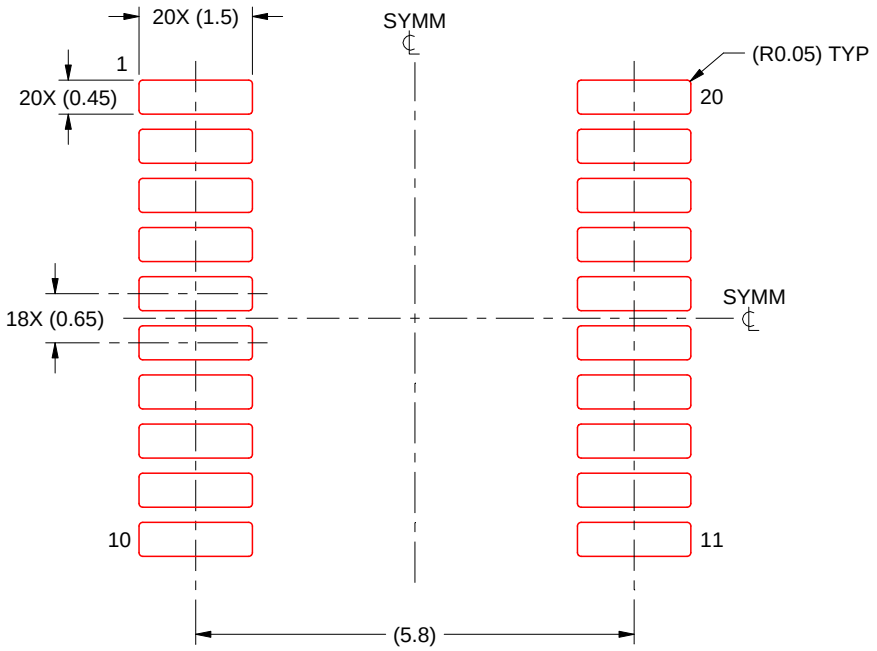

SOLDER PASTE EXAMPLE
BASED ON 0.125 mm THICK STENCIL
SCALE: 10X

4220206/A 02/2017

NOTES: (continued)

8. Laser cutting apertures with trapezoidal walls and rounded corners may offer better paste release. IPC-7525 may have alternate design recommendations.
9. Board assembly site may have different recommendations for stencil design.

Downloaded From Oneyac.com

PW (R–PDSO–G20) PLASTIC SMALL OUTLINE

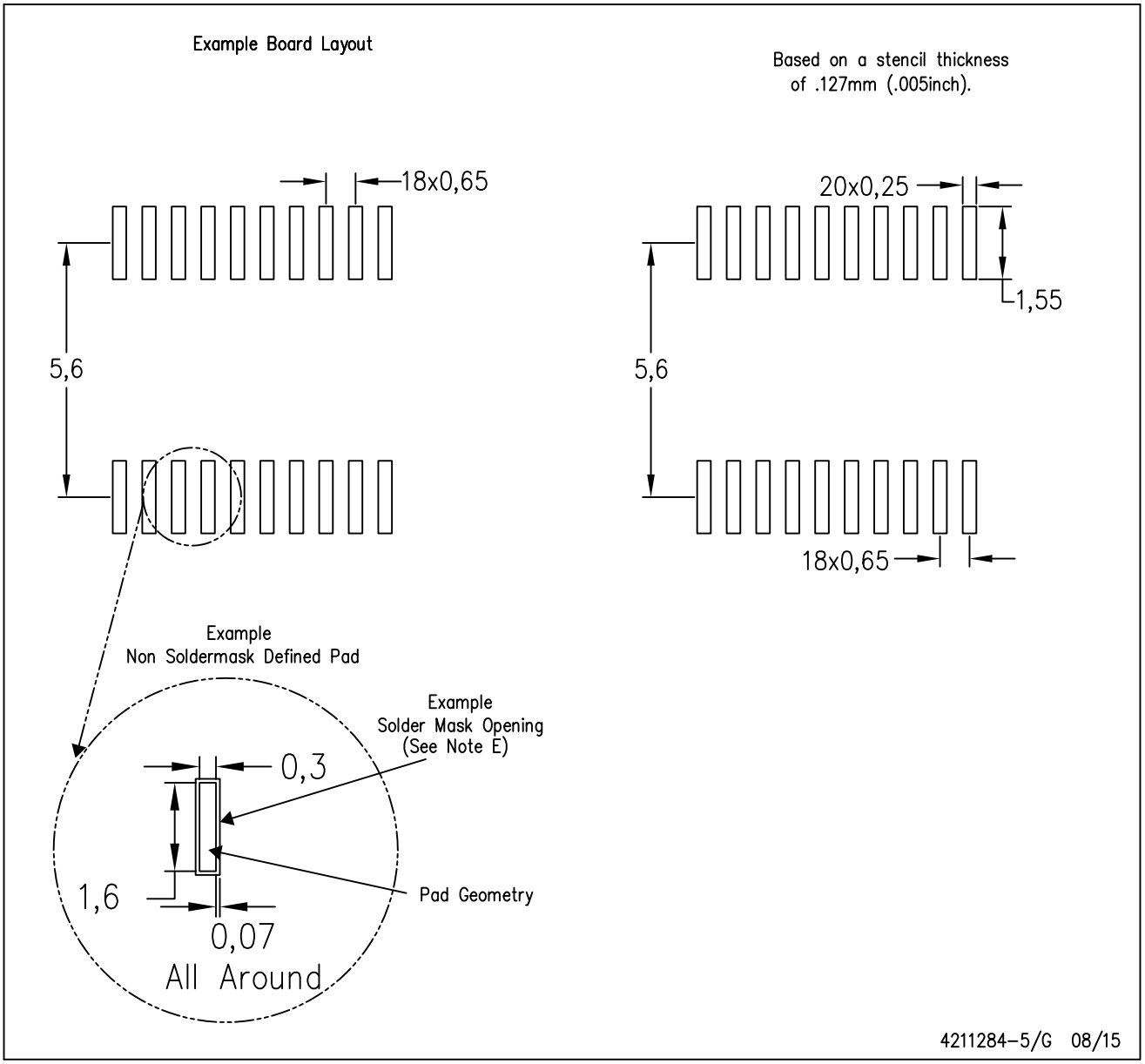

NOTES:
A. All linear dimensions are in millimeters.
B. This drawing is subject to change without notice.
C. Publication IPC–7351 is recommended for alternate design.
D. Laser cutting apertures with trapezoidal walls and also rounding corners will offer better paste release. Customers should contact their board assembly site for stencil design recommendations. Refer to IPC–7525 for other stencil recommendations.
E. Customers should contact their board fabrication site for solder mask tolerances between and around signal pads.

Downloaded From Oneyac.com

PACKAGE OUTLINE

DB0020A

SSOP - 2 mm max height

SMALL OUTLINE PACKAGE

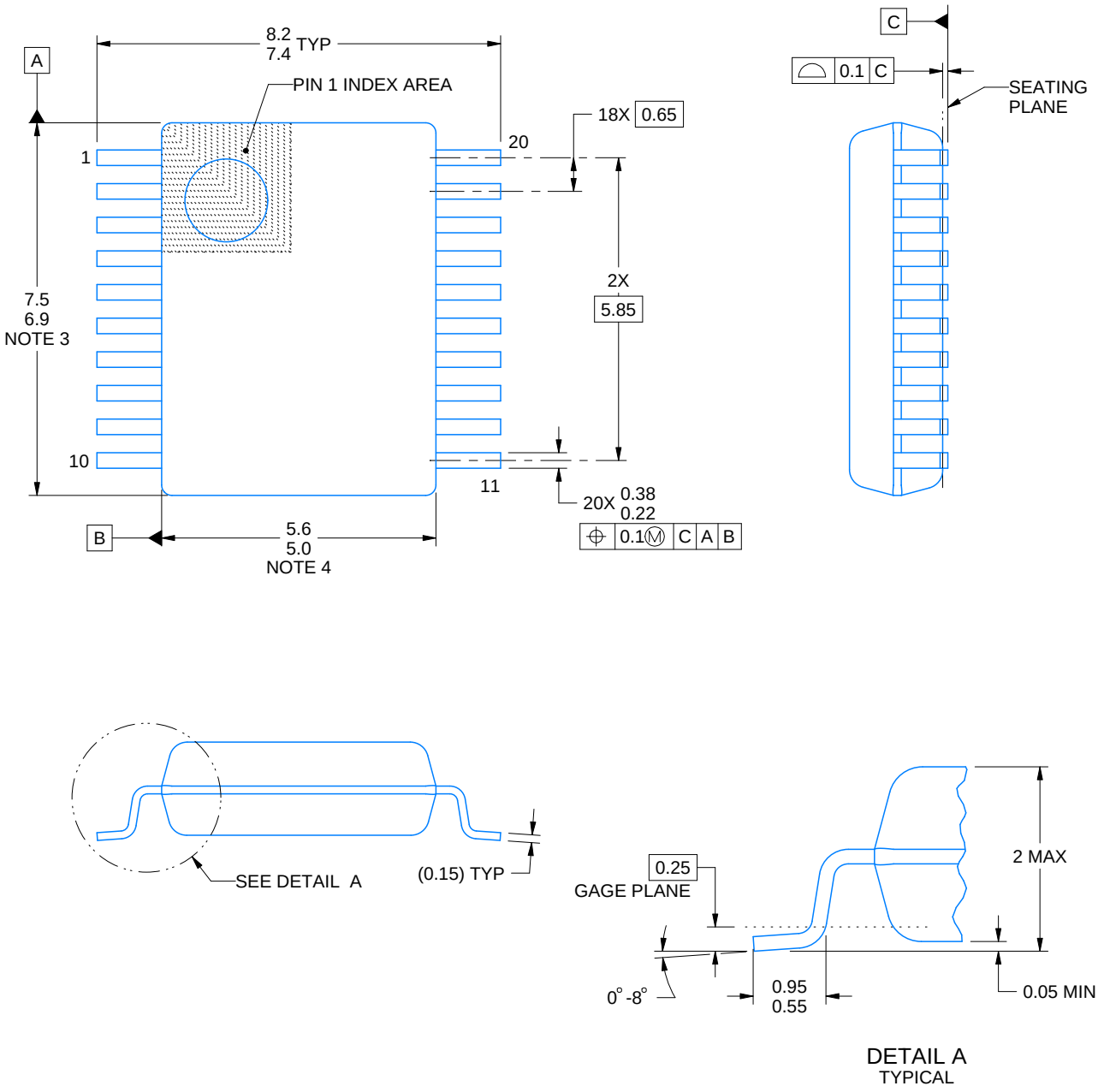

NOTES:

1. All linear dimensions are in millimeters. Any dimensions in parenthesis are for reference only. Dimensioning and tolerancing per ASME Y14.5M.
2. This drawing is subject to change without notice.
3. This dimension does not include mold flash, protrusions, or gate burrs. Mold flash, protrusions, or gate burrs shall not exceed 0.15 mm per side.
4. This dimension does not include interlead flash. Interlead flash shall not exceed 0.25 mm per side.
5. Reference JEDEC registration MO-150.

Texas Instruments

Downloaded From Oneyac.com

EXAMPLE BOARD LAYOUT

DB0020A

SSOP - 2 mm max height

SMALL OUTLINE PACKAGE

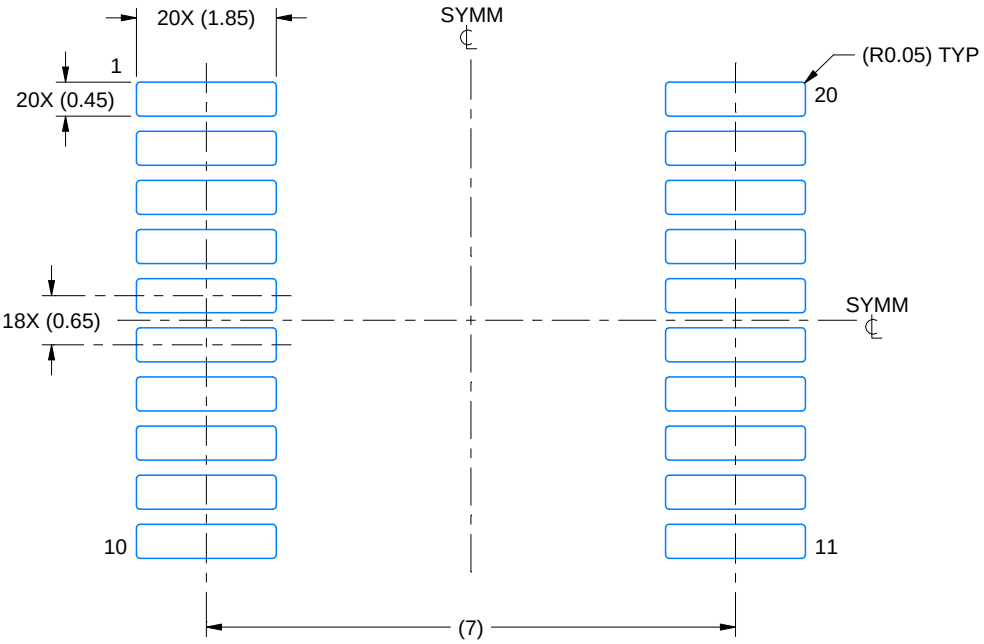

LAND PATTERN EXAMPLE
EXPOSED METAL SHOWN
SCALE: 10X

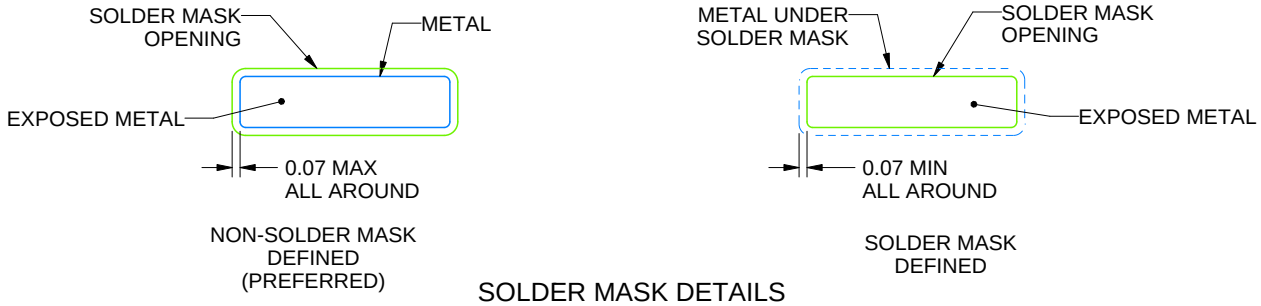

SOLDER MASK DETAILS

4214851/B 08/2019

NOTES: (continued)

6. Publication IPC-7351 may have alternate designs.
7. Solder mask tolerances between and around signal pads can vary based on board fabrication site.

Texas Instruments
Downloaded From Oneyac.com

EXAMPLE STENCIL DESIGN

DB0020A

SSOP - 2 mm max height

SMALL OUTLINE PACKAGE

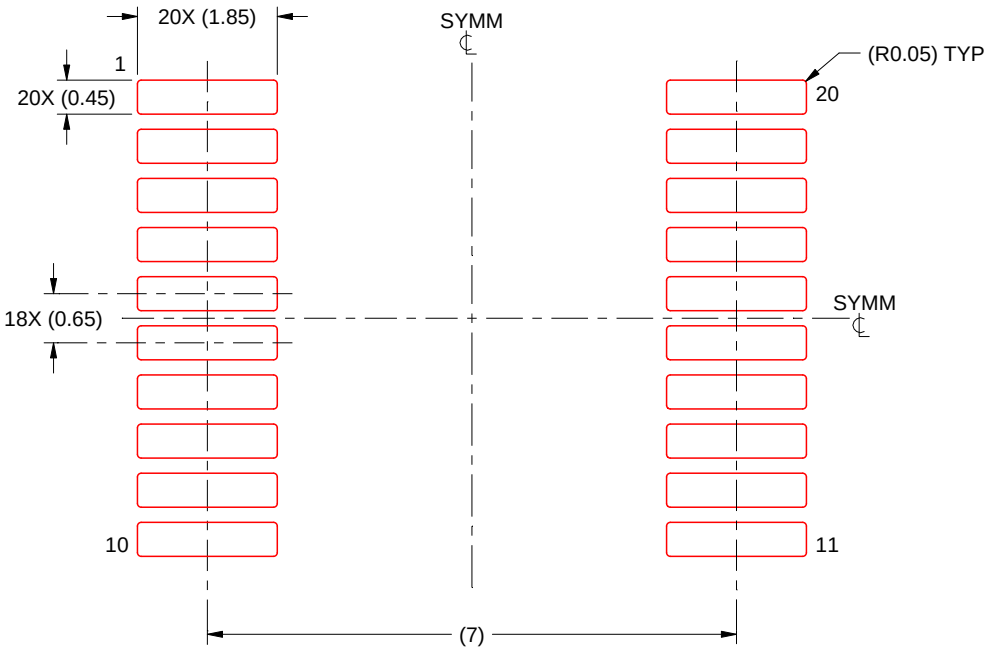

SOLDER PASTE EXAMPLE
BASED ON 0.125 mm THICK STENCIL
SCALE: 10X

4214851/B 08/2019

NOTES: (continued)

8. Laser cutting apertures with trapezoidal walls and rounded corners may offer better paste release. IPC-7525 may have alternate design recommendations.
9. Board assembly site may have different recommendations for stencil design.

Texas Instruments
Downloaded From Oneyac.com

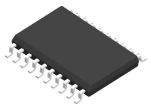

PACKAGE OUTLINE

DW0020A

SOIC - 2.65 mm max height

SOIC

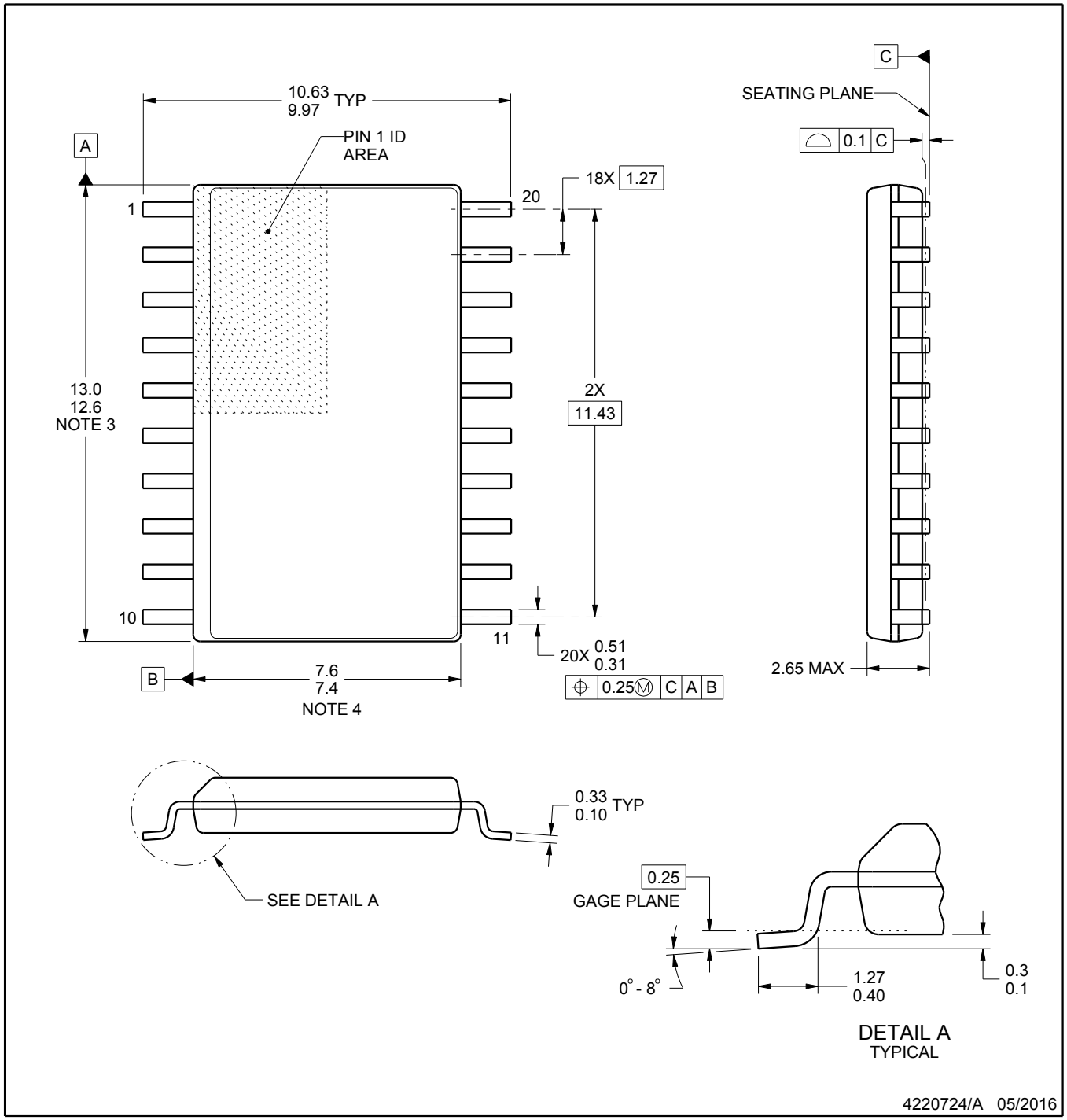

NOTES:

1. All linear dimensions are in millimeters. Dimensions in parenthesis are for reference only. Dimensioning and tolerancing per ASME Y14.5M.
2. This drawing is subject to change without notice.
3. This dimension does not include mold flash, protrusions, or gate burrs. Mold flash, protrusions, or gate burrs shall not exceed 0.15 mm per side.
4. This dimension does not include interlead flash. Interlead flash shall not exceed 0.43 mm per side.
5. Reference JEDEC registration MS-013.

Downloaded From Oneyac.com

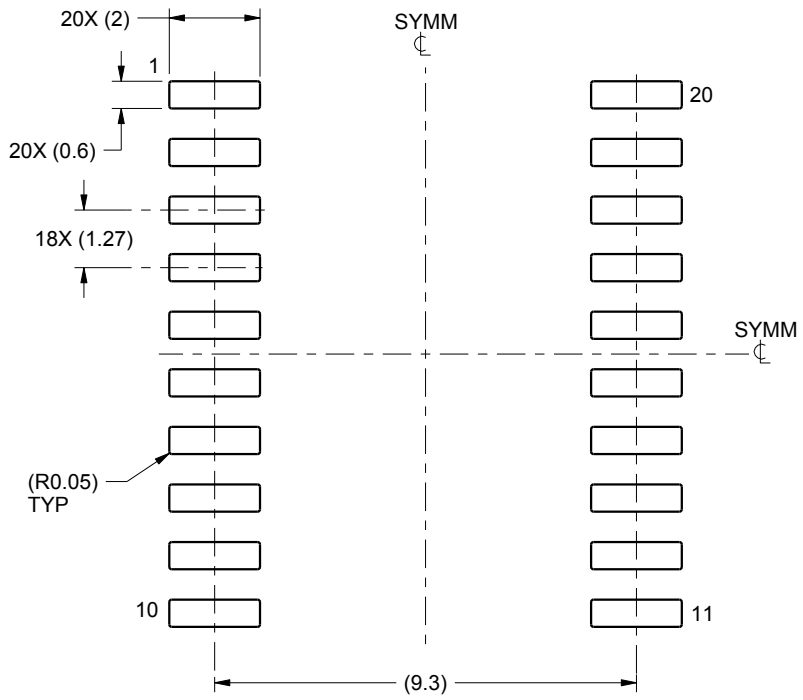

LAND PATTERN EXAMPLE
SCALE:6X

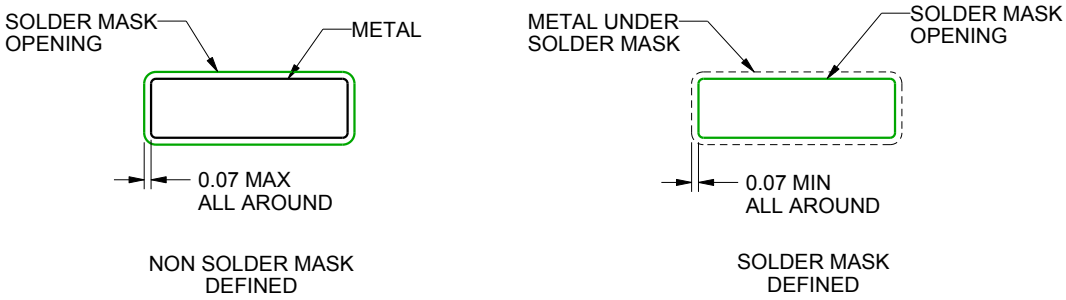

SOLDER MASK DETAILS

4220724/A 05/2016

NOTES: (continued)

6. Publication IPC-7351 may have alternate designs.
7. Solder mask tolerances between and around signal pads can vary based on board fabrication site.

Texas Instruments

Downloaded From Oneyac.com

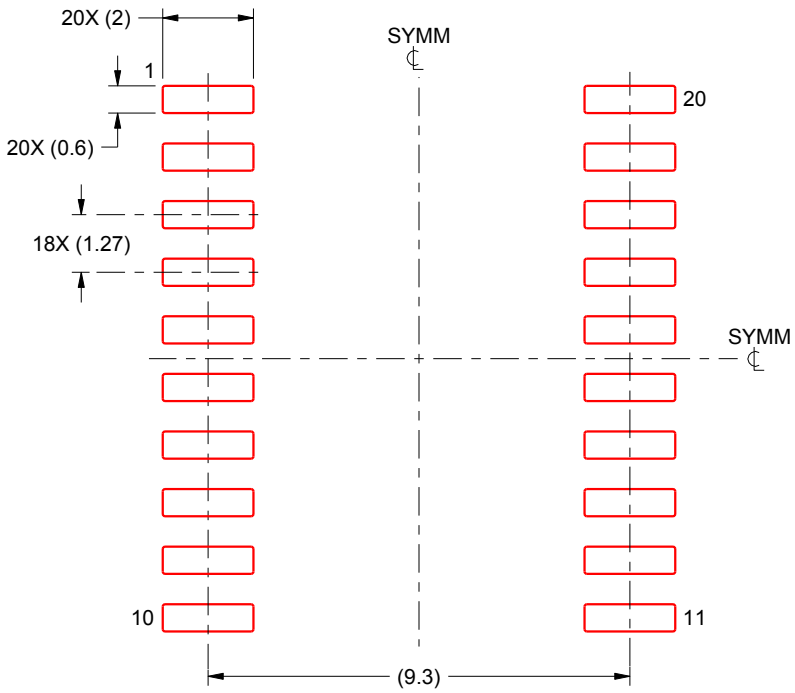

SOLDER PASTE EXAMPLE
BASED ON 0.125 mm THICK STENCIL
SCALE:6X

4220724/A 05/2016

NOTES: (continued)

8. Laser cutting apertures with trapezoidal walls and rounded corners may offer better paste release. IPC-7525 may have alternate design recommendations.
9. Board assembly site may have different recommendations for stencil design.

Downloaded From Oneyac.com

IMPORTANT NOTICE AND DISCLAIMER

TI PROVIDES TECHNICAL AND RELIABILITY DATA (INCLUDING DATA SHEETS), DESIGN RESOURCES (INCLUDING REFERENCE DESIGNS), APPLICATION OR OTHER DESIGN ADVICE, WEB TOOLS, SAFETY INFORMATION, AND OTHER RESOURCES “AS IS” AND WITH ALL FAULTS, AND DISCLAIMS ALL WARRANTIES, EXPRESS AND IMPLIED, INCLUDING WITHOUT LIMITATION ANY IMPLIED WARRANTIES OF MERCHANTABILITY, FITNESS FOR A PARTICULAR PURPOSE OR NON-INFRINGEMENT OF THIRD PARTY INTELLECTUAL PROPERTY RIGHTS.

These resources are intended for skilled developers designing with TI products. You are solely responsible for (1) selecting the appropriate TI products for your application, (2) designing, validating and testing your application, and (3) ensuring your application meets applicable standards, and any other safety, security, regulatory or other requirements.

These resources are subject to change without notice. TI grants you permission to use these resources only for development of an application that uses the TI products described in the resource. Other reproduction and display of these resources is prohibited. No license is granted to any other TI intellectual property right or to any third party intellectual property right. TI disclaims responsibility for, and you will fully indemnify TI and its representatives against, any claims, damages, costs, losses, and liabilities arising out of your use of these resources.

TI’s products are provided subject to TI’s Terms of Sale or other applicable terms available either on ti.com or provided in conjunction with such TI products. TI’s provision of these resources does not expand or otherwise alter TI’s applicable warranties or warranty disclaimers for TI products.

TI objects to and rejects any additional or different terms you may have proposed.

Mailing Address: Texas Instruments, Post Office Box 655303, Dallas, Texas 75265
Copyright © 2023, Texas Instruments Incorporated

Downloaded From Oneyac.com

单击下面可查看定价，库存，交付和生命周期等信息

>>TI(德州仪器)

Downloaded From Oneyac.com