3 Channels 1.5A, 1.5MHz DC/DC Step-Down PMU

FEATURES

- 2.5V to 5.5V Input Voltage Range
- Output Voltage as Low as 0.6V
- 100% Duty Cycle in Dropout Operation
- High-Efficiency Synchronous-Mode Operation
- Peak current capability of single channel is 1.5A
- Input Voltage UVP&OVP
- Thermal Fault Protection
- Internal Soft-Start
- Fixed 1.5MHz Switching Frequency
- Over-Current Protection and Hiccup
- Available in a 20-pin 3mm x 3mm QFN Package

GENERAL DESCRIPTION

The TMI7003C is a Highly integrated power management IC designed to minimize power consumption in consumer and multimedia applications. It is targeted at Tablet, Mobile Internet Devices, Personal Navigation Devices, Digital Photo Frame, Portable DVD Player, Entertaining and Education Machine. Providing a complete system power management solution, the TMI7003C integrates 3-channel synchronous buck converter. The converters are optimized for high efficiency (greater than 93%) and feature integrated low impedance FETs.

APPLICATIONS

- Digital Set-top Box (STB)
- Flat-Panel Television and Monitors
- Portable Media Player (PMP)

TYPICAL APPILCATION

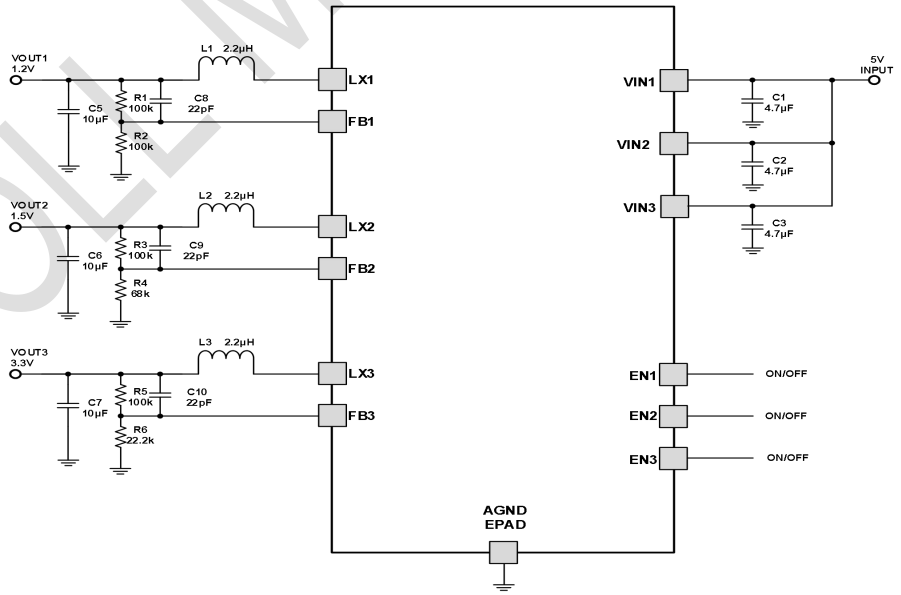

Figure 1. Basic Application Circuit

TOLL Microelectronic

Downloaded From Oneyac.com

ABSOLUTE MAXIMUM RATINGS (Note 1)

Parameter	Value	Unit
Input Supply Voltage	-0.3~7.0	V
LX Voltages	-0.3~7.0	V
EN, FB Voltage	-0.3~7.0	V
LX Voltage (<10ns transient)	-2.5~7.5	V
LX Voltage (<5ns transient)	-3.5~8.5	V
Peak Current limit	1.6	A
Junction Temperature (Note 2)	150	°C
Power Dissipation	1.6	W
Lead Temperature (Soldering,10s)	260	°C

PIN CONFIGURATION

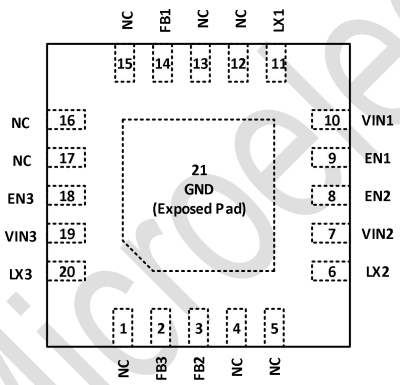

QFN3X3-20 (top view)

Top Mark: T7003C/YYXXX (T7003C: Device Code, YYXXX: Inside Code)

Part Number	Package	Top mark	Quantity/ Reel
TMI7003C	QFN3X3-20	T7003C YYXXX	3000

TMI7003C devices are Pb-free and RoHS compliant.

TOLL Microelectronic

Downloaded From Oneyac.com

PIN FUNCTIONS

Pin	Name	Function
1	NC	No Connection.
2	FB3	Feedback input of CH3. Connect to output voltage with a resistor divider
3	FB2	Feedback input of CH2. Connect to output voltage with a resistor divider
4	NC	No Connection.
5	NC	No Connection.
6	LX2	Internal MOSFET Switching output of CH2
7	VIN2	Power input pin of CH2. Recommended to use a 10μF MLCC capacitor between VIN2 pin and GND.
8	EN2	CH2 turn on/turns off control input. Don't leave this pin floating
9	EN1	CH1 turn on/turns off control input. Don't leave this pin floating
10	VIN1	Power input pin of CH1. Recommended to use a 10μF MLCC capacitor between VIN1 pin and GND.
11	LX1	Internal MOSFET Switching output of CH1
12	NC	No Connection.
13	NC	No Connection.
14	FB1	Feedback input of CH1. Connect to output voltage with a resistor divider
15	NC	No Connection.
16	NC	No connection.
17	NC	No Connection.
18	EN3	CH3 turn on/turns off control input. Don't leave this pin floating
19	VIN3	Power input pin of CH3. Recommended to use a 10μF MLCC capacitor between VIN3 pin and GND.
20	LX3	Internal MOSFET Switching output of CH3.
21	GND(EP)	The Exposed Pad must be soldered to a large PCB copper plane and connected to GND for appropriate dissipation

TOLL Microelectronic

Downloaded From Oneyac.com

ESD RATING

Items	Description	Value	Unit
V_{ESD_HBM}	Human Body Model for all pins	±2000	V

JEDEC specification JS-001

RECOMMENDED OPERATING CONDITIONS

Items	Description	Min	Max	Unit
Voltage Range	IN	2.5	5.5	V
T_J	Operating Junction Temperature Range	-40	125	°C

THERMAL RESISITANCE (Note 3)

Items	Description	Value	Unit
θ_{JA}	Junction-to-ambient thermal resistance	75	°C/W

TOLL Microelectronic

Downloaded From Oneyac.com

ELECTRICAL CHARACTERISTICS

(V_{IN}=5V, T_A = 25°C, unless otherwise noted.)

Parameter	Test Conditions	Min	Typ	Max	Unit
Input Voltage Range		2.5		5.5	V
Buck Regulator 1, 2, 3					
OVP Threshold			6.0		V
UVLO Threshold			2.3		V
Input DC Supply Current (PWM Mode)	V_{OUT} = 90%, I_{LOAD}=0mA		150	300	μA
Input DC Supply Current (PFM Mode)	V_{OUT} = 105%, I_{LOAD}=0mA		40	75	μA
Input DC Supply Current (Shutdown Mode)	V_{EN}= 0V, V_{IN}=4.2V		0.1	2	μA
Regulated Feedback Voltage V_{FB}	T_A= 25°C, PWM operation	0.588	0.600	0.612	V
Oscillation Frequency	V_{OUT}=100%		1.5		MHz
	V_{OUT}=0V		400		kHz
On Resistance of PMOS	I_{LX}=100mA		300		mΩ
On Resistance of NMOS	I_{LX}=-100mA		180		mΩ
Peak Current Limit	V_{IN}= 5V, V_{OUT}=90%	1.5			A
EN Input High Voltage		1.5			V
EN Input Low Voltage				0.4	V
EN Enable Delay Time			250		μs
Soft Start Time	10%xV_{OUT} to 90%xV_{OUT}	750	1000	1250	μs
EN Leakage Current			±0.01	±1.0	μA
LX Leakage Current	V_{EN}=0V, V_{IN}=V_{LX}=5V		±0.01	±1.0	μA
Thermal Shutdown Threshold (Note 4)			160		°C
Thermal Shutdown Hysteresis (Note 4)			20		°C

Note 1: Absolute Maximum Ratings are those values beyond which the life of a device may be impaired.

Note 2: T_J is calculated from the ambient temperature T_A and power dissipation P_D according to the following formula: $T_J = T_A + (P_D) \times \theta_{JA}$.

Note 3: Measured on JESD51-7, 4-layer PCB.

Note 4: Thermal shutdown threshold and hysteresis are guaranteed by design.

TOLL Microelectronic

Downloaded From Oneyac.com

GENERAL DESCRIPTION

Feature Description

TMI7003C is a highly efficient and integrated Power Management IC for Systems-on-a-Chip (SoCs), ASICs, and processors. The device incorporates 3 high-efficiency synchronous buck regulators.

Each of the buck regulators is specially designed for high-efficiency operation throughout the load range. With 1.5MHz typical Switching frequency, the external L-C filter can be small and still provide very low output voltage ripple. The bucks are internally compensated to be stable with the recommended external inductors and capacitors as detailed in the application diagram. Synchronous rectification yields high efficiency for low voltage and high output currents.

Additional features include soft-start, under-voltage lockout, bypass, and current and thermal overload protection.

3 channel BUCKs are nearly identical in performance and mode of operation. They can operate in automatic mode (PWM/PFM). At very light loads, BUCKs enter PFM mode and operate with reduced Switching frequency and supply current to maintain high efficiency.

Soft-Start

Each of BUCKs has an internal soft-start circuit that limits the in-rush current during startup. This allows the converters to gradually reach the steady-state operating point, thus reducing startup stresses and surges. During startup, the Switch current limit is increased in steps. The startup time depends on the output capacitor size, load current and output voltage. The typical soft-start time is 1ms.

Current Limiting

A current limit feature protects the device and any external components during overload conditions. In PWM mode the current limiting is implemented by using an internal comparator that trips at current levels according to the buck capability. If the output is shorted to ground the device enters a timed current limit mode where the NFET is turned on for a longer duration until the inductor current falls below a low threshold, ensuring inductor current has more time to decay, thereby preventing runaway.

Uder-Voltage Lock Out (UVLO)

The VIN voltage is monitored for a supply under voltage condition, for which the operation of the device cannot be guaranteed. The part will automatically disable PMIC. To prevent unstable operation, the UVLO has a hysteresis window. An under-voltage lockout (UVLO) will disable BUCKs outputs, Once the supply voltage is above the UVLO hysteresis, the device will initiate a power-up sequence and then enter the active state.

Input Over Voltage Protection (OVP)

The VIN voltage is monitored for a supply over voltage condition, for which the operation of the device cannot be guaranteed. The purpose of OVP is to protect the part and all other components connected to the PMIC outputs from any damage and malfunction. Once VIN rises over about 6.0V, BUCKs will be disabled automatically. To prevent unstable operation, the OVP has a hysteresis window. An input over

TOLL Microelectronic

Downloaded From Oneyac.com

voltage protection (OVP) will force the device into the reset state, Once the supply voltage goes below the OVP lower threshold, the device will initiate a power-up sequence and then enter the active state.

Thermal Shutdown (OTP)

The temperature of the silicon die is monitored for an over-temperature condition, for which the operation of the device cannot be guaranteed. The part will automatically be disabled if the temperature is too high. The thermal shutdown (OTP) will force the device into the reset state. In reset, all circuitry is disabled. To prevent unstable operation, the OTP has a hysteresis window of about 20°C. Once the temperature has decreased below the OTP hysteresis, the device will initiate a power-up sequence and then enter the active state. In the active state, the part will start up as if for the first time.

TOLL Microelectronic

Downloaded From Oneyac.com

TYPICAL PERFORMANCE CHARACTERISTICS

Steady State Operation

V_{IN} =5V, V_{OUT} =1.2V, No Load

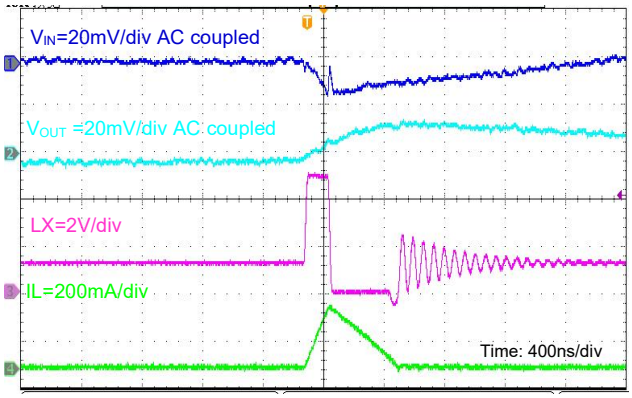

Steady State Operation

V_{IN} =5V, V_{OUT} =1.2V, I_o=1A

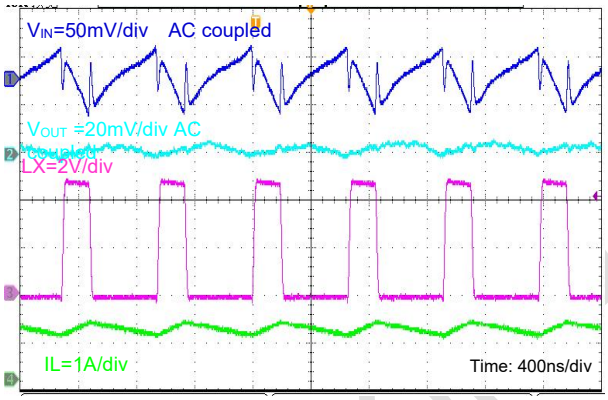

Load Transient

V_{IN} =5V, V_{OUT} =3.3V, I_o =0A to 1A

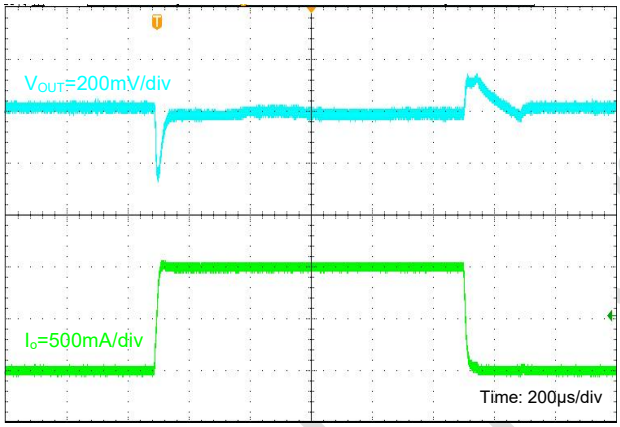

Load Transient

V_{IN} =5V, V_{OUT} =3.3V, I_o =0.1A to 0.9A

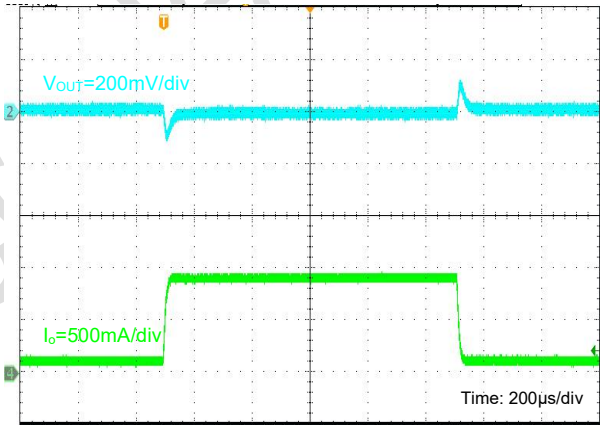

Output Short Entry

V_{IN} =5V, V_{OUT} =1.2V, No Load

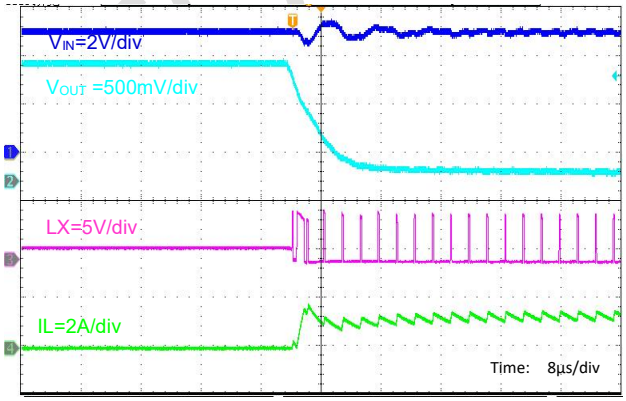

Output Short Recovery

V_{IN} =5V, V_{OUT} =1.2V, No Load

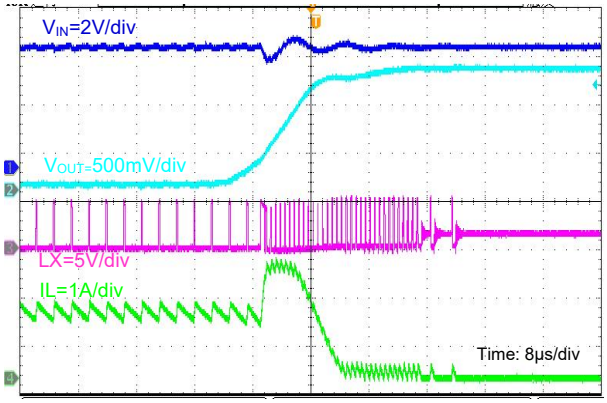

Downloaded From Oneyac.com

TYPICAL PERFORMANCE CHARACTERISTICS (continued)

VIN Power On

V_{IN} =5V, No Load

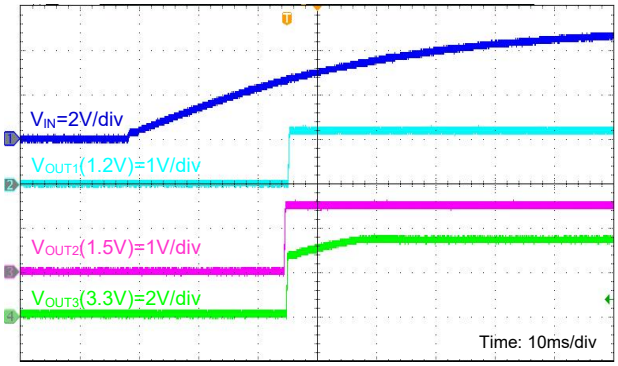

VIN Power down

V_{IN} =5V, No Load

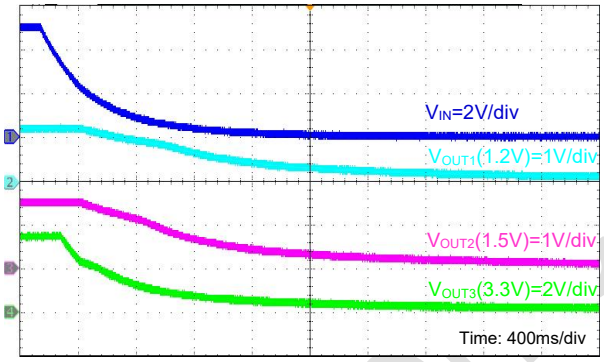

VIN Power On

V_{IN} =5V, Full Load

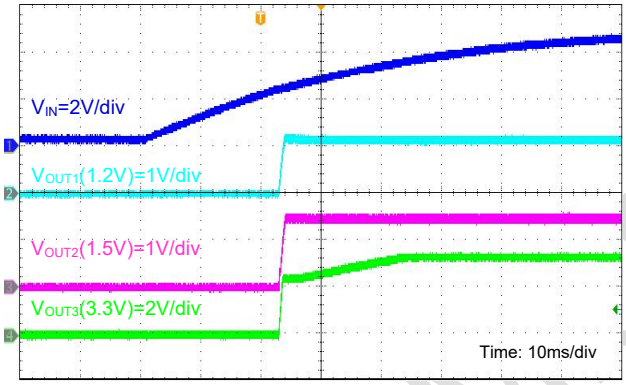

VIN Power down

V_{IN} =5V, Full Load

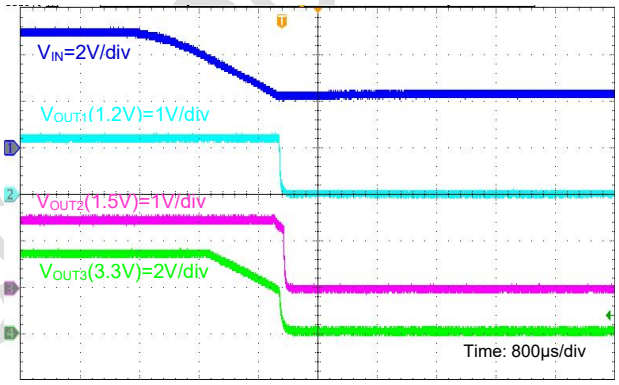

EN Enable Power On/Off

V_{IN} =5V, EN1 and EN2, Full Load

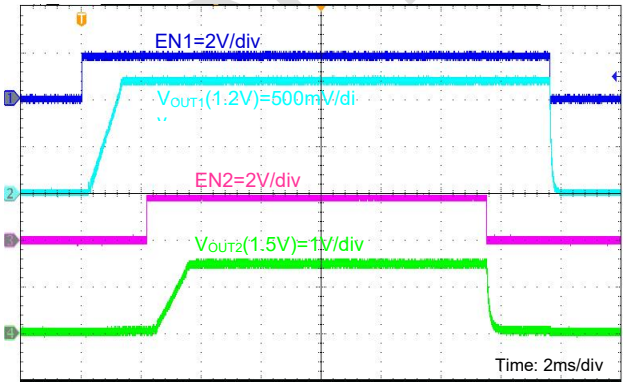

EN Disable Power down

V_{IN} =5V, EN1 and EN2, Full Load

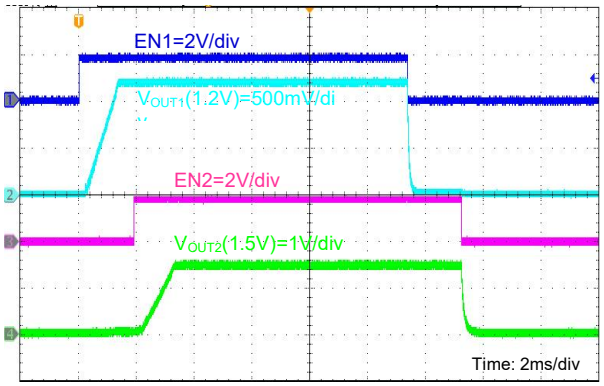

Downloaded From Oneyac.com

TYPICAL PERFORMANCE CHARACTERISTICS (continued)

EN Enable Power On/Off

V_{IN} =5V, EN1 and EN3, Full Load

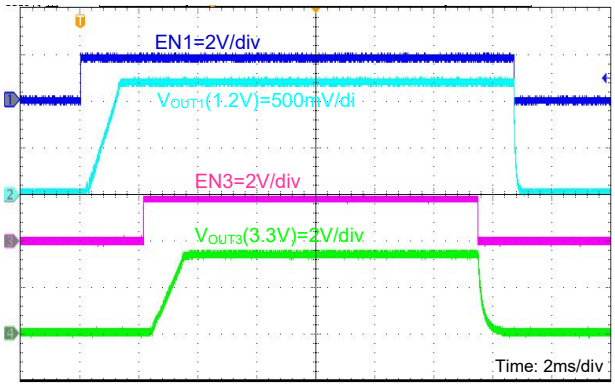

EN Disable Power down

V_{IN} =5V, EN1 and EN3, Full Load

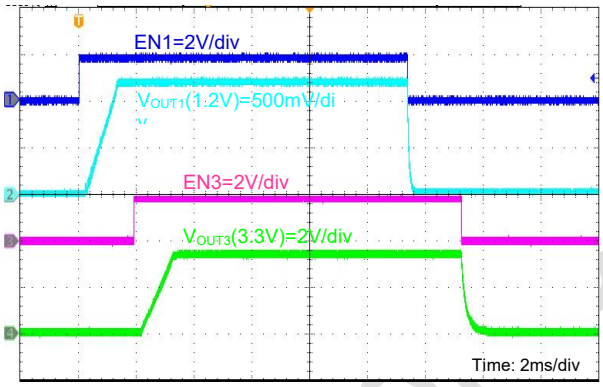

TOLL Microelectronic

Downloaded From Oneyac.com

DETAILED DESIGN PROCEDURE

External Components Selection

TMI7003C require an input capacitor, an output capacitor and an inductor. These components are critical to the performance of the device. TMI7003C are internally compensated and do not require external components to achieve stable operation. The output voltage can be programmed by resistor divider.

$$V_{OUT}=V_{FB}*\frac{R1+R2}{R2}$$

Select R1 value around 50kΩ

$$R2=R1*\frac{V_{FB}}{V_{OUT}-V_{FB}}$$

Where V_{FB} as 0.6V

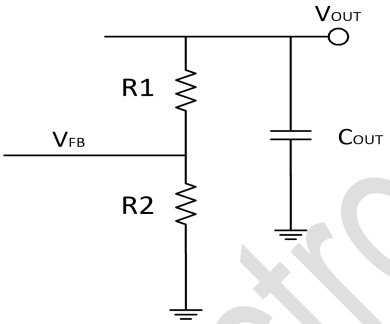

Output Inductors and Capacitors Selection

There are several design considerations related to the selection of output inductors and capacitors:

- Load transient response
- Stability
- Efficiency
- Output ripple voltage
- Over current ruggedness

The device has been optimized for use with nominal LC values as shown in the Application Diagram.

BUCK Power Supply Recommendations

TMI7003C are designed to operate from input voltage supply range between 2.5 V and 5.5 V. This input supply must be well regulated. If the input supply is located more than a few inches, additional bulk capacitance may be required in addition to the ceramic bypass capacitors. A ceramic capacitor with an effective value of 4.7μF is a typical choice.

VIN must be connected to input capacitors as close as possible.

BUCK Inductor Selection

The recommended inductor values are shown in the Application Diagram. It is important to guarantee the inductor core does not saturate during any foreseeable operational situation. The inductor should be rated to handle the peak load current plus the ripple current: Care should be taken when reviewing the different saturation current ratings that are specified by different manufacturers. Saturation current ratings are typically specified at 25°C, so ratings at maximum ambient temperature of the application should be requested from the manufacturer.

$$I_{L(MAX)}=I_{LOAD(MAX)}+I_{RIPPLE}=I_{LOAD(MAX)}+\frac{D*(V_{IN}-V_{OUT})}{2*L*F_S}$$

TOLL Microelectronic

Downloaded From Oneyac.com

$D=\frac{V_{OUT}}{V_{IN}}$, F_S=1MHz, L=2.2uH

where

- $I_{L(MAX)}$: Max inductor Current
- $I_{LOAD(MAX)}$: Max load current
- I_{RIPPLE}: Peak-to-Peak inductor current
- D: Estimated duty factor
- V_{IN}: Input voltage
- V_{OUT}: Output voltage
- F_S: Switching frequency, Hertz

Recommended Method for BUCK Inductor Selection

The best way to guarantee the inductor does not saturate is to choose an inductor that has saturation current rating greater than the maximum device current limit, as specified in the Electrical Characteristics. In this case the device will prevent inductor saturation by going into current limit before the saturation level is reached.

Alternate Method for BUCK Inductor Selection

If the recommended approach cannot be used care must be taken to guarantee that the saturation current is greater than the peak inductor current:

$I_{SAT} > I_{LPEAK}$

$$I_{LPEAK}=I_{OUTMAX}+\frac{I_{RIPPLE}}{2}$$

$$I_{RIPPLE}=\frac{D*(V_{IN}-V_{OUT})}{L*F_S}$$

$$D=\frac{V_{OUT}}{V_{IN}*EFF}$$

where

- I_{SAT}: Inductor saturation current at operating temperature
- I_{LPEAK}: Peak inductor current during worst case conditions
- I_{OUTMAX}: Maximum average inductor current
- I_{RIPPLE}: Peak-to-Peak inductor current
- V_{OUT}: Output voltage
- V_{IN}: Input voltage
- L: Inductor value in Henries at I_{OUTMAX}
- F_S: Switching frequency, Hertz
- D: Estimated duty factor
- EFF: Estimated power supply efficiency

I_{SAT} may not be exceeded during any operation, including transients, startup, high temperature, worst case conditions, etc.

TOLL Microelectronic

Downloaded From Oneyac.com

Output and Input Capacitors Characteristics

Special attention should be paid when selecting these components. The DC bias of these capacitors can result in a capacitance value that falls below the minimum value given in the recommended capacitor specifications table.

The ceramic capacitor's actual capacitance can vary with temperature. The capacitor type X7R, which operates over a temperature range of −55°C to +125°C, will only vary the capacitance to within ±15%. The capacitor type X5R has a similar tolerance over a reduced temperature range of −55°C to +85°C. Many large value ceramic capacitors, larger than 1uF are manufactured with Z5U or Y5V temperature characteristics. Their capacitance can drop by more than 50% as the temperature varies from 25°C to 85°C, therefore X5R or X7R is recommended over Z5U and Y5V in applications where the ambient temperature will change significantly above or below 25°C.

BUCK Output Capacitor Selection

The output capacitor of a Switching converter absorbs the AC ripple current from the inductor and provides the initial response to a load transient. The ripple voltage at the output of the converter is the product of the ripple current flowing through the output capacitor and the impedance of the capacitor. The impedance of the capacitor can be dominated by capacitive, resistive, or inductive elements within the capacitor, depending on the frequency of the ripple current. Ceramic capacitors have very low ESR and remain capacitive up to high frequencies. Their inductive component can be usually neglected at the frequency ranges the Switcher operates.

The output-filter capacitor smooths out the current flow from the inductor to the load and helps maintain a steady output voltage during transient load changes. It also reduces output voltage ripple. These capacitors must be selected with sufficient capacitance and low enough ESR to perform these functions.

Note that the output voltage ripple increases with the inductor current ripple and the Equivalent Series Resistance of the output capacitor (ESRCOUT), also note that the actual value of the capacitor's ESRCOUT is frequency and temperature dependent, as specified by its manufacturer. The ESR should be calculated at the applicable Switching frequency and ambient temperature.

$$V_{OUT\text{-}RIPPLE\text{-}PP}=\frac{I_{RIPPLE}}{8*F_S*C_{OUT}}$$

Where

$$I_{RIPPLE}=\frac{D*(V_{IN}-V_{OUT})}{2*L*F_S}$$

$$D=\frac{V_{OUT}}{V_{IN}}$$

where

- $V_{OUT\text{-}RIPPLE\text{-}PP}$: estimated output voltage ripple
- I_{RIPPLE}: estimated current ripple
- D: Estimated duty factor

Output ripple can be estimated from the vector sum of the reactive (capacitance) voltage component and the real (ESR) voltage component of the output capacitor:

Downloaded From Oneyac.com

$$V_{OUT\text{-}RIPPLE\text{-}PP}=\sqrt{V_{ROUT}^2+V_{COUT}^2}$$

where

$$V_{ROUT}=I_{RIPPLE}*ESR_{COUT}$$

$$V_{COUT}=\frac{I_{RIPPLE}}{8*F_S*C_{OUT}}$$

where

• $V_{OUT\text{-}RIPPLE\text{-}PP}$: estimated output ripple,

• V_{ROUT}: estimated real output ripple,

• V_{COUT}: estimated reactive output ripple.

The device is designed to be used with ceramic capacitors on the outputs of the buck regulators. The recommended dielectric type of these capacitors is X5R, X7R, or of comparable material to maintain proper tolerances over voltage and temperature. The recommended effective value for the output capacitors is 10μF with an ESR of 2mΩ or less. The output capacitors need to be mounted as close as possible to the output/ground terminals of the device.

BUCK Input Capacitor Selection

Input capacitor should be located as close as possible to their corresponding VIN and GND terminals, tantalum capacitor can also be located in the proximity of the device.

The input capacitor supplies the AC Switching current drawn from the Switching action of the internal power MOSFETs. The input current of a buck converter is discontinuous, so the ripple current supplied by the input capacitor is large. The input capacitor must be rated to handle both the RMS current and the dissipated power. The input capacitor must be rated to handle this current:

$$V_{RMS_CIN}=I_{OUT}\frac{\sqrt{V_{OUT}*(V_{IN}-V_{OUT})}}{V_{IN}}$$

The power dissipated in the input capacitor is given by:

$$P_{D_CIN}=I_{RMS_CIN}^2*R_{ESR_CIN}$$

The device is designed to be used with ceramic capacitors on the inputs of the buck regulators. The recommended dielectric type of these capacitors is X5R, X7R, or of comparable material to maintain proper tolerances over voltage and temperature. The minimum recommended effective value for the input capacitor is larger than 4.7μF with an ESR of 10mΩ or less. The input capacitors need to be mounted as close as possible to the power/ground input terminals of the device.

The input power source supplies the average current continuously. During the high side MOSFET Switch on-time, however, the demanded di/dt is higher than can be typically supplied by the input power source. This delta is supplied by the input capacitor.

A simplified “worst case” assumption is that all of the high side MOSFET current is supplied by the input capacitor. This will result in conservative estimates of input ripple voltage and capacitor RMS current.

Input ripple voltage is estimated as follows:

$$V_{PPIN}=\frac{I_{OUT}*D}{C_{IN}*F_S}+I_{OUT}*ESR_{CIN}$$

where

• V_{PPIN}: Estimated peak-to-peak input ripple voltage

Downloaded From Oneyac.com

• I_{OUT}: Output current
• C_{IN}: Input capacitor value
• $ESRC_{IN}$: Input capacitor ESR

This capacitor is exposed to significant RMS current, so it is important to select a capacitor with an adequate RMS current rating. Capacitor RMS current estimated as follows:

$$I_{RMSCIN}=\sqrt{D*(I_{OUT}^2+\frac{I_{RIPPLE}^2}{12})}$$

Where

• I_{RMSCIN}: Estimated input capacitor RMS current

Layout Guidelines

PC board layout is an important part of DC-DC converter design. Poor board layout can disrupt the performance of a DC-DC converter and surrounding circuitry by contributing to EMI, ground bounce, and resistive voltage loss in the traces. These can send erroneous signals to the DC-DC converter resulting in poor regulation or instability. Good layout can be implemented by following a few simple design rules.

1) Keep the path of Switching current short and minimize the loop area formed by Input capacitor, IN pin and GND.
2) Bypass ceramic capacitors are suggested to be put close to the IN Pin.
3) Ensure all feedback connections are short and direct. Place the feedback resistors as close to the chip as possible.
4) VOUT, LX away from sensitive analog areas such as FB.
5) Connect IN, LX, and especially GND respectively to a large copper area to cool the chip to improve thermal performance and long-term reliability.

TOLL Microelectronic

Downloaded From Oneyac.com

PACKAGE INFORMATION

QFN3x3-20

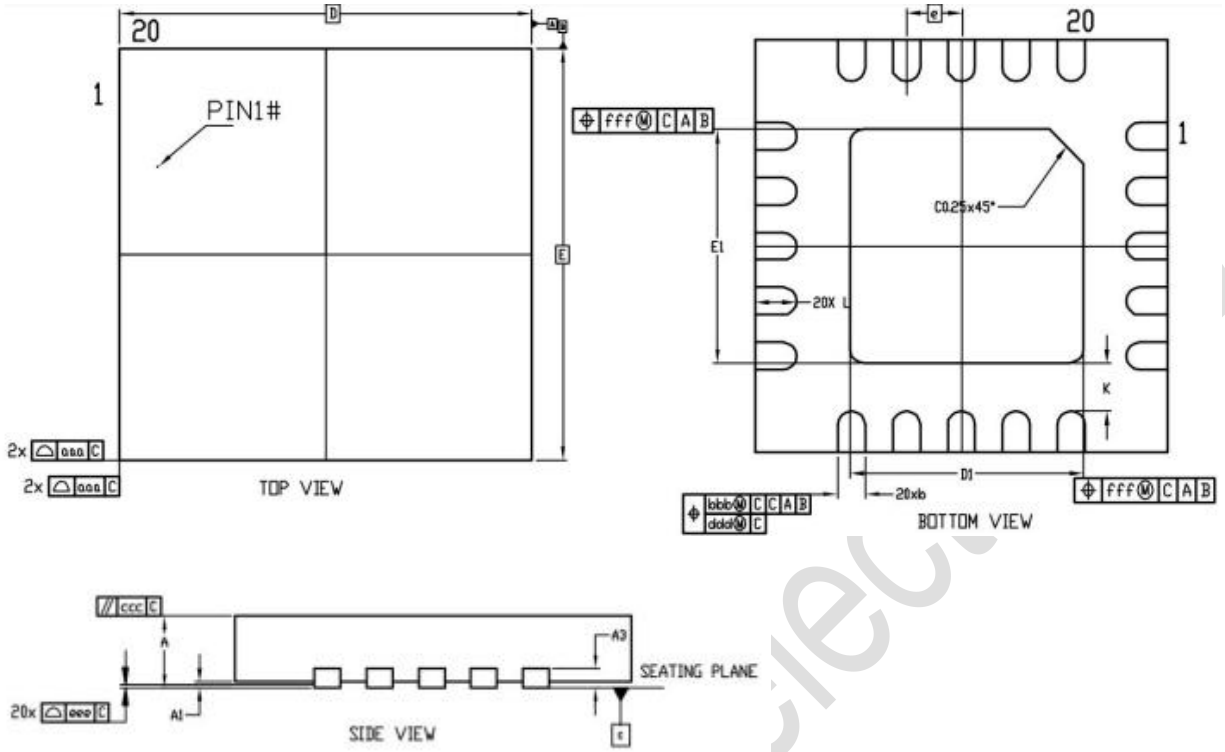

Unit: mm

Symbol	Dimensions In Millimeters			Symbol	Dimensions In Millimeters		
	Min	Typ	Max		Min	Typ	Max
A	0.50	0.55	0.60	b	0.15	0.20	0.25
A1	0.00	0.02	0.05	L	0.25	0.30	0.35
A3	-	0.152 REF	-	01	1.60	1.70	1.80
D/E	3.00BSC			E1	1.60	1.70	1.80
K	0.20			e	0.40 BSC		
bbb	0.07	-	-	aaa	0.10		
ddd	0.05			ccc	0.10		
fff	0.10			eee	0.08		

Note:

1) All dimensions are in millimeters.

Downloaded From Oneyac.com

TAPE AND REEL INFORMATION

TAPE DIMENSIONS: QFN3x3-20

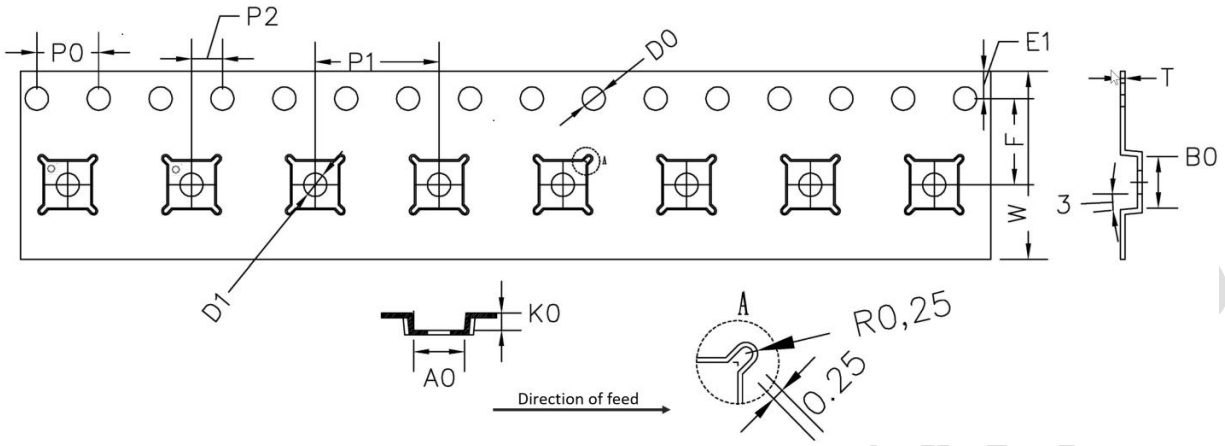

Unit: mm

Symbol	Dimensions	Symbol	Dimensions	Symbol	Dimensions	Symbol	Dimensions
A0	3.30±0.10	P0	4.00±0.10	E1	1.75±0.10	D1	1.55±0.05
B0	3.30±0.10	P1	8.00±0.10	F	5.50±0.10	T	0.30±0.05
K0	1.10±0.10	P2	2.00±0.10	D0	1.55±0.05	W	12.00±0.30

REEL DIMENSIONS: QFN3x3-20

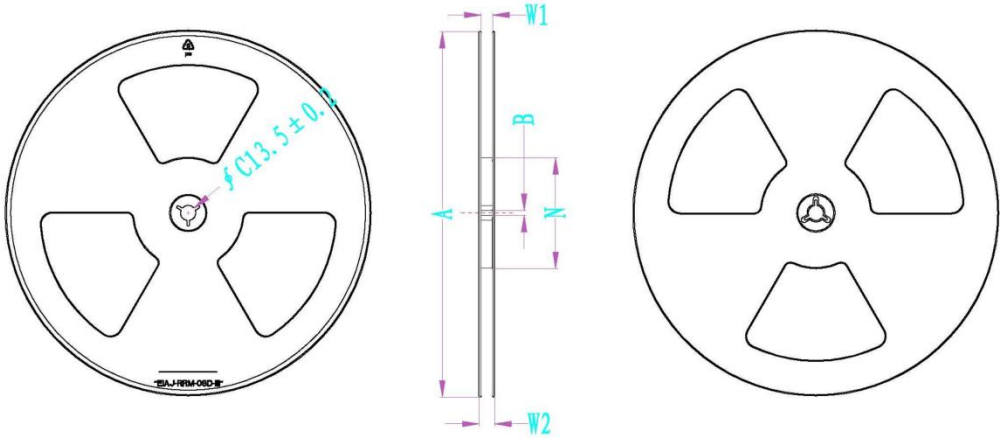

Unit: mm

Ø A	B	Ø C	Ø N	W1	W2
330±1.0	4.7±0.5	13.5±0.2	100±0.5	13.4±0.5	17.4±0.5

Note:

1) All Dimensions are in Millimeter
2) Quantity of Units per Reel is 3000
3) MSL level is level 3.

Downloaded From Oneyac.com

Important Notification

This document only provides product information. TOLL Microelectronic Inc. reserves the right to make corrections, modifications, enhancements, improvements, and other changes to its products and to discontinue any product without notice at any time.

TOLL Microelectronic Inc. cannot assume responsibility for use of any circuitry other than circuitry entirely embodied in a TOLL Microelectronic Inc. product. No circuit patent licenses are implied.

All rights are reserved by TOLL Microelectronic Inc.
http:// www.toll-semi.com

TOLL Microelectronic

Downloaded From Oneyac.com

单击下面可查看定价，库存，交付和生命周期等信息

>>TMI

Downloaded From Oneyac.com