1.5MHz, 1.2A Synchronous Step-Down Converter

FEATURES

- High Efficiency: Up to 96%(@3.3V)
- 1.5MHz Constant Frequency Operation
- 1.2A Output Current
- No Schottky Diode Required
- 2.5V to 5.5V Input Voltage Range
- Output Voltage as Low as 0.6V
- 100% Duty Cycle in Dropout
- Low Quiescent Current: 40μA
- Slope Compensated Current Mode Control for Excellent Line and Load Transient Response
- Soft Start time for 1ms
- Short Circuit Protection with Frequency reduction mode
- Thermal Fault Protection
- Inrush Current Limit and Soft Start
- Input over voltage protection (OVP)
- <1μA Shutdown Current
- Available SOT23-5 and DFN2x2-6 Packages

GENERAL DESCRIPTION

The TMI3408 are 1.5MHz constant frequency, current mode step-down converters. The devices integrate a main switch and a synchronous rectifier for high efficiency without an external Schottky diode. It is ideal for powering portable equipment that runs from a single cell Lithium-Ion (Li+) battery. The output voltage can be regulated as low as 0.6V. The TMI3408 can also run at 100% duty cycle for low dropout operation, extending battery life in portable system. The devices offer two operation modes, PWM control and PFM Mode switching control, which allows a high efficiency over the wider range of the load.

APPLICATIONS

- Cellular and Smart Phones
- Wireless and DSL Modems
- PDA/MID/PAD
- Digital Still and Video Cameras

TYPICAL APPILCATION

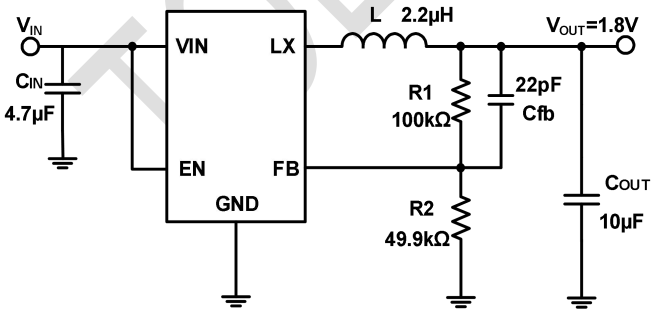

Figure 1. Basic Application Circuits

Efficiency

V_{OUT}=1.8V, L=2.2μH

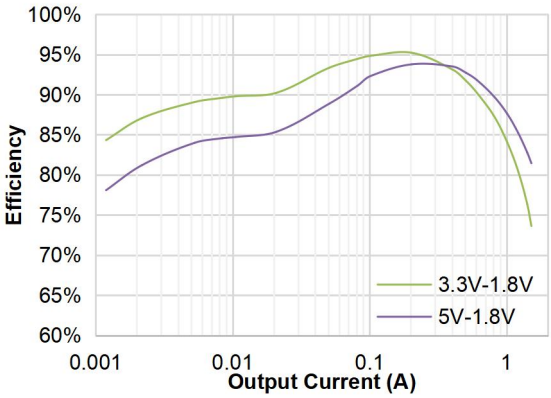

Downloaded From Oneyac.com

ABSOLUTE MAXIMUM RATINGS (Note 1)

Parameter	Min	Max	Unit
Input Supply Voltages	-0.3	6.5	V
LX Voltages	-0.3	6.5	V
EN, FB Voltage	-0.3	6.5	V
LX Voltage (<10ns transient)	-2.5	7	V
LX Voltage (<5ns transient)	-3.5	7.5	V
Storage Temperature Range	-65	150	°C
Junction Temperature (Note 2)	-40	155	°C
Power Dissipation(SOT23-5)	-	650	mW
Power Dissipation(DFN2x2-6)	-	855	mW
Lead Temperature Soldering, 10Sec	-	260	°C

PIN CONFIGURATION(Top View)

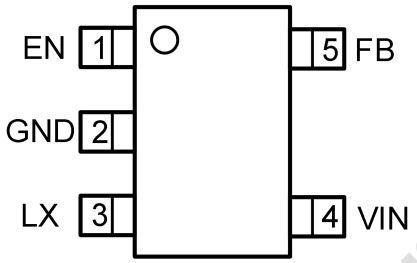

SOT23-5

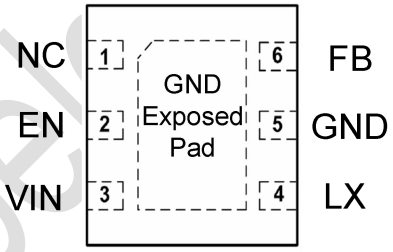

DFN2x2-6

Top Mark: T25AXXX (T25A: Device Code, XXX: Inside Code)
Top Mark: T28A/XXX (T28A: Device Code, XXX: Inside Code)

Part Number	Package	Top mark	Quantity/ Reel
TMI3408	SOT23-5	T25AXXX	3000
TMI3408D	DFN2x2-6	T28A XXX	3000

TMI3408 devices are Pb-free and RoHS compliant.

TOLL Microelectronic

Downloaded From Oneyac.com

PIN FUNCTIONS

PIN		Name	Function
SOT23-5	DFN2x2-6		
1	2	EN	Chip Enable Pin.Do not leave EN floating.
2	5	GND	Ground Pin.
3	4	LX	Power Switch Output. It is the switch node connection to Inductor.
4	3	VIN	Power Supply Input. Must be closely decoupled to GND with a 4.7μF or greater ceramic capacitor.
5	6	FB	Output Voltage Feedback Pin.
-	1	NC	No Connection
-	7	GND	Ground Pin (Exposed Pad).

ESD RATING

Items	Description	Value	Unit
V_{ESD_HBM}	Human Body Model for all pins	±2000	V
V_{ESD_CDM}	Charger Device Model for all pins	±1000	V

JEDEC specification JS-001

RECOMMENDED OPERATING CONDITIONS

Items	Description	Min	Max	Unit
Voltage Range	V_{IN}	2.5	5.5	V
T_J	Operating Junction Temperature Range	-40	125	°C

THERMAL RESISITANCE (Note 3)

Items	Description	Package	Value	Unit
θ_{JA}	Junction-to-ambient thermal resistance	SOT23-5	200	°C/W
		DFN2x2-6	152	
θ_{JB}	Junction-to-board thermal resistance	SOT23-5	36	°C/W
		DFN2x2-6	25	
θ_{JC}	Junction-to-case thermal resistance	SOT23-5	60	°C/W
		DFN2x2-6	25	

TOLL Microelectronic

Downloaded From Oneyac.com

ELECTRICAL CHARACTERISTICS

(V_{IN}=V_{EN}=5V, V_{OUT}=1.8V, T_A = 25°C, unless otherwise noted.)

Parameter	Test Conditions	Min	Typ	Max	Unit
Input Voltage Range		2.5		5.5	V
OVP Threshold			6.0		V
UVLO Threshold			2.3		V
Quiescent Current	V_{EN}=2.0V, V_{OUT}=1.2V		40	65	μA
Shutdown Current	V_{EN} =0V		0.1	10	μA
Regulated Feedback Voltage	T_A = 25°C	0.588	0.600	0.612	V
Reference Voltage Line Regulation	V_{IN} = 2.5V to 5.5V		0.04	0.40	%/V
Output Voltage Line Regulation	V_{IN} = 2.5V to 5.5V		0.04	0.4	%
Output Voltage Load Regulation			0.5		%
Oscillation Frequency	V_{OUT}=100%	1.2	1.5	1.8	MHz
Oscillation Frequency	V_{OUT}=0V		300		kHz
Soft-start time			0.5		ms
On Resistance of PMOS	I_{LX}=100mA		0.25	0.30	Ω
On Resistance of NMOS	I_{LX}=-100mA		0.10	0.15	Ω
Peak Current Limit	V_{IN}=5V, V_{OUT}=1.2V, L=4.7μH/2A	1.5		2.4	A
EN Rising Threshold	Rising	0.8	1.1	1.4	V
EN Falling Threshold	Falling	0.6	0.9	1.2	V
EN Leakage Current			±0.01	±1.0	μA
LX Leakage Current	V_{EN}=0V, V_{IN}=V_{LX}=5V		±0.01	±1.0	μA
Thermal Shutdown Threshold (Note 4)			150		°C
Thermal Shutdown Hysteresis (Note 4)			25		°C

Note 1: Absolute Maximum Ratings are those values beyond which the life of a device may be impaired.

Note 2: T_J is calculated from the ambient temperature T_A and power dissipation P_D according to the following formula: $T_J = T_A + (P_D) \times \theta_{JA}$.

Note 3: Measured on JESD51-7, 4-layer PCB.

Note 4: Guaranteed by design.

TOLL Microelectronic

Downloaded From Oneyac.com

FUNCTION DESCRIPTION

The TMI3408 are high performance 1.2A 1.5MHz monolithic step-down converters. The TMI3408 require only three external power components (C_{IN}, C_{OUT} and L). The adjustable version can be programmed with external feedback to any voltage, ranging from 0.6V to the input voltage.

At dropout, the converter duty cycle increases to 100% and the output voltage tracks the input voltage minus the $R_{DS(on)}$ drop of the high-side MOSFET.

The internal error amplifier and compensation provides excellent transient response, load, and line regulation. Soft start function prevents input inrush current and output overshoot during start up.

FUNCTIONAL BLOCK DIAGRAM

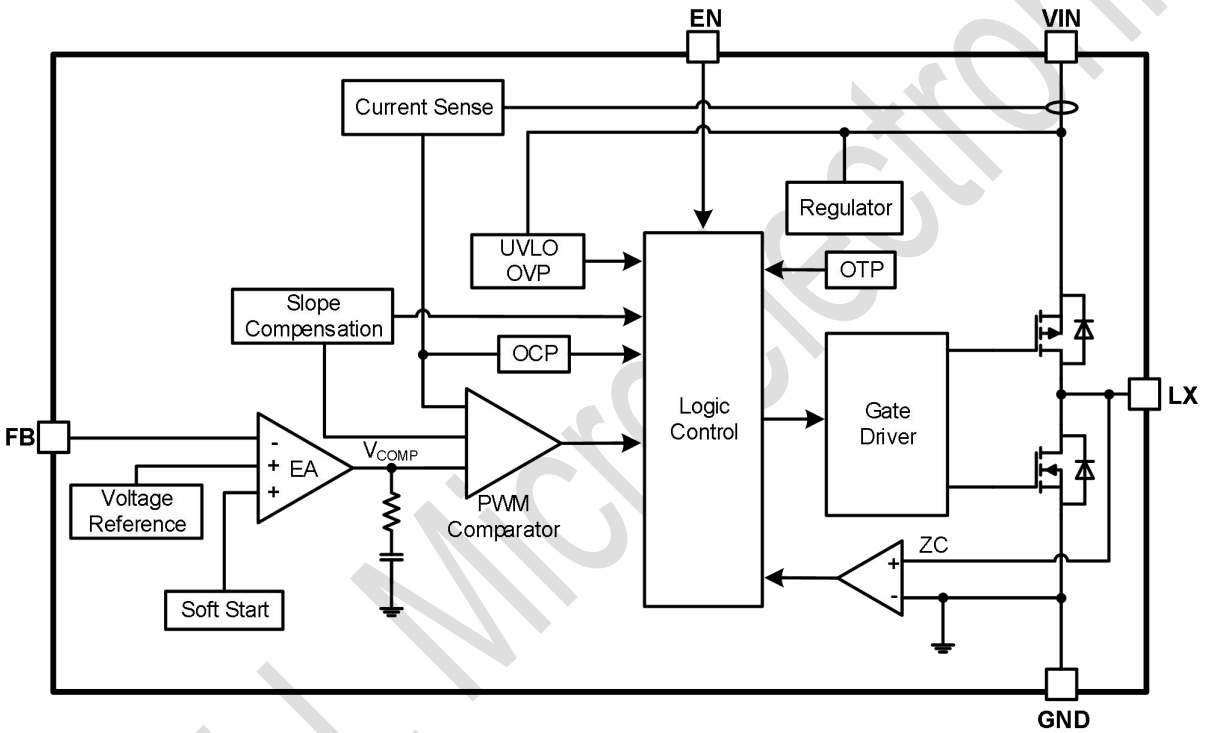

Figure 2. TMI3408 Block Diagram

TOLL Microelectronic

Downloaded From Oneyac.com

TYPICAL PERFORMANCE CHARACTERISTICS

Test condition: V_{IN}=5V, V_{OUT}=1.8V, L=2.2μH, T_A=+25°C, unless other noted.

Efficiency

V_{IN} =5V, L=2.2μH

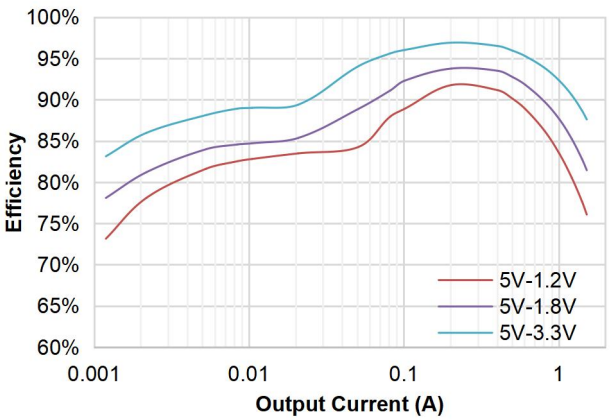

Efficiency

V_{IN} =3.3V, L=2.2μH

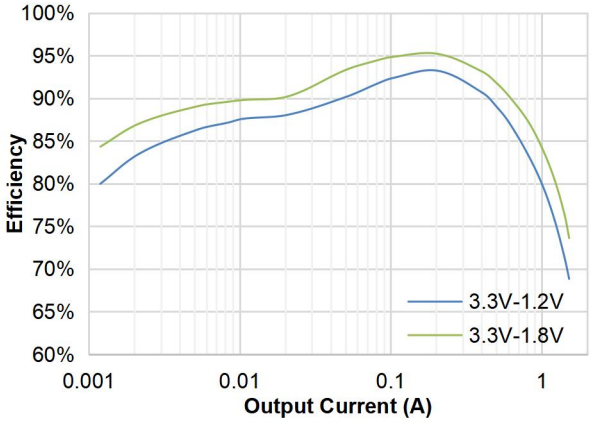

Load Regulation

V_{OUT} =1.8V, L=2.2μH, I_{OUT}=0A to 1.2A

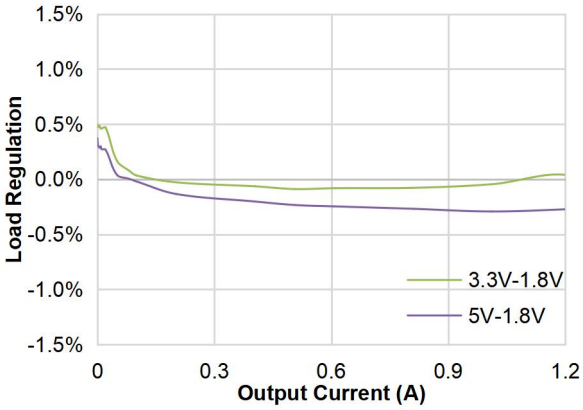

Line Regulation

V_{OUT} =1.8V, L=2.2μH, V_{IN}=2.5V to 5.5V

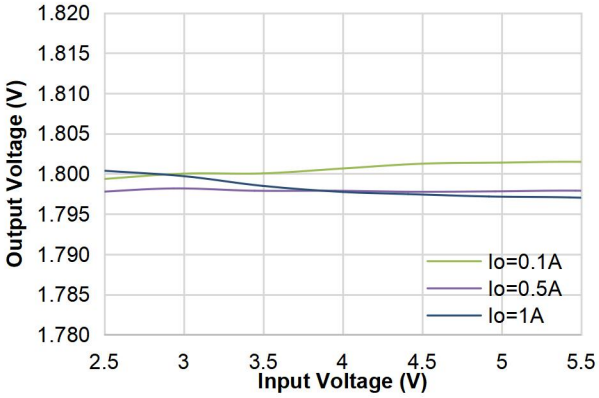

Steady State Operation

V_{IN} =5V, V_{OUT} =1.8V, No Load

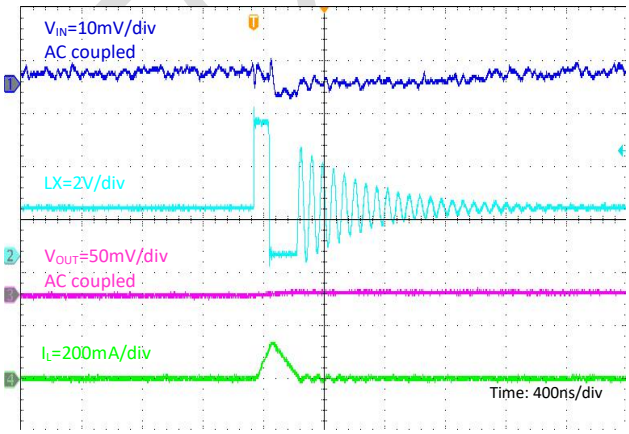

Steady State Operation

V_{IN} =5V, V_{OUT} =1.8V, I_o=1A

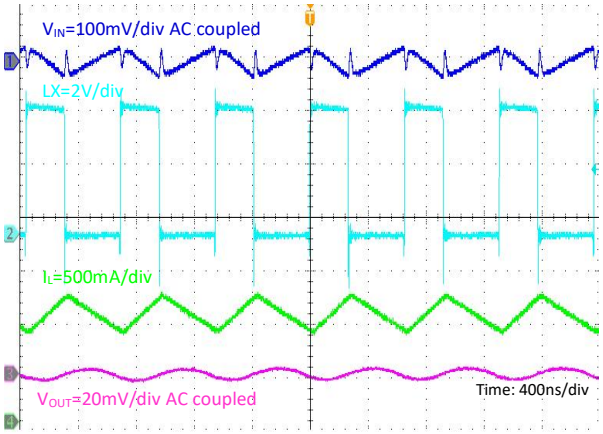

Downloaded From Oneyac.com

TYPICAL PERFORMANCE CHARACTERISTICS (continued)

Load Transient

V_{IN} =5V, V_{OUT} =1.8V, I_o = 0A to 1A

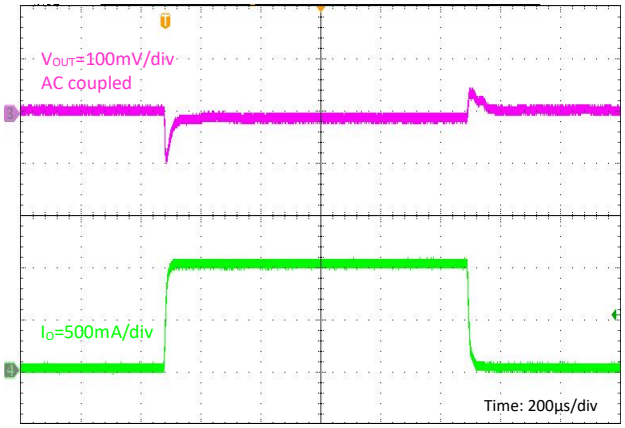

Load Transient

V_{IN} =5V, V_{OUT} =1.8V, I_o = 0.1A to 0.9A

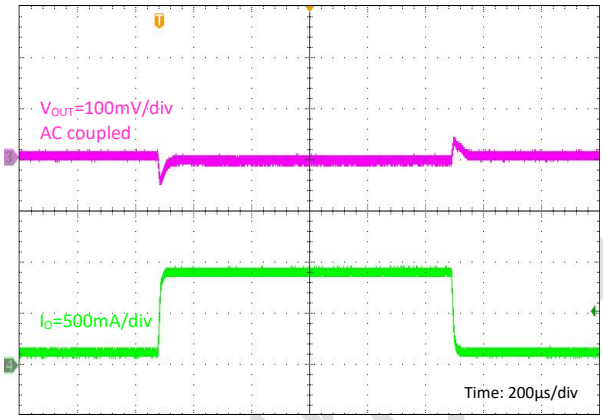

Load Transient

V_{IN} =5V, V_{OUT} =1.8V, I_o = 0A to 0.5A

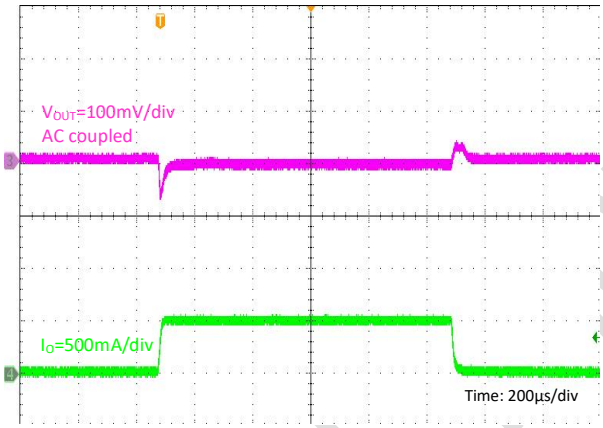

Load Transient

V_{IN} =5V, V_{OUT} =1.8V, I_o = 0.5A to 1A

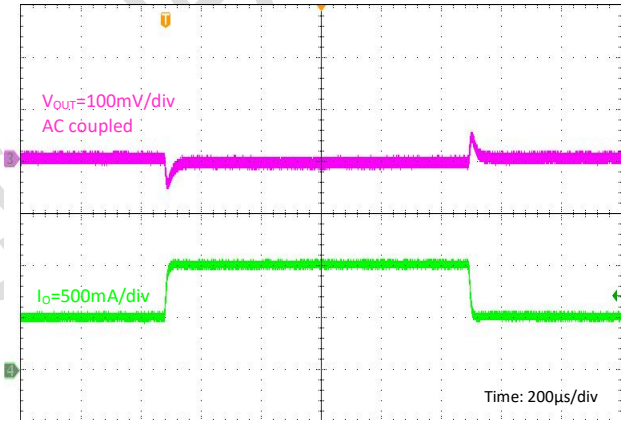

EN Enable Power On

V_{EN} =3.6V, V_{OUT} =1.8V, No Load

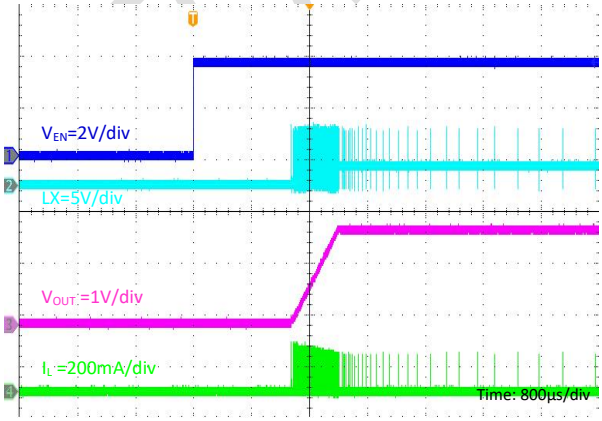

EN Disable Power Down

V_{EN} =3.6V, V_{OUT} =1.8V, No Load

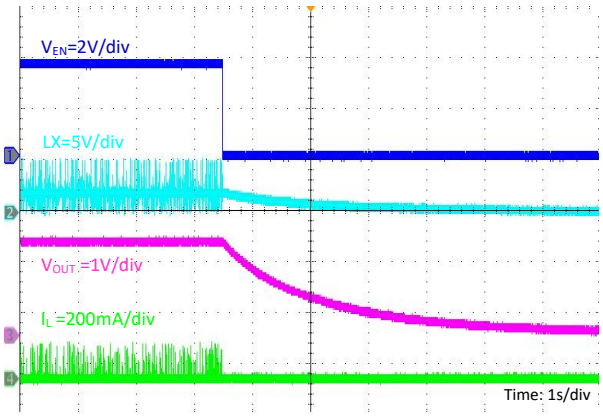

Downloaded From Oneyac.com

TYPICAL PERFORMANCE CHARACTERISTICS (continued)

EN Enable Power On

V_{EN} =3.6V, V_{OUT} =1.8V, I_o=1A

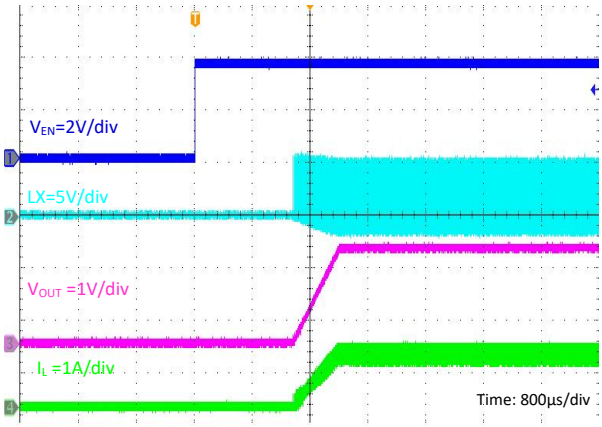

EN Disable Power Down

V_{EN} =3.6V, V_{OUT} =1.8V, I_o=1A

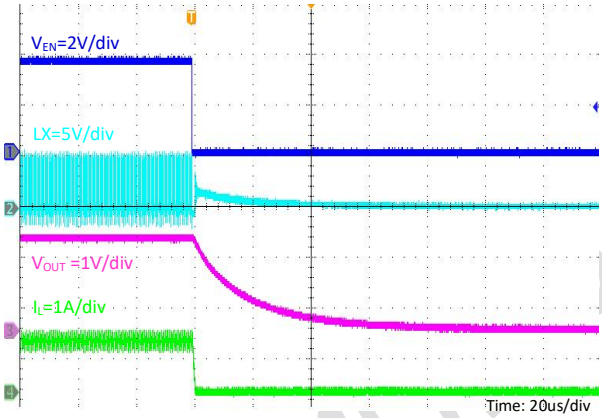

Input Power On

V_{IN} =5V, V_{OUT} =1.8V, No Load

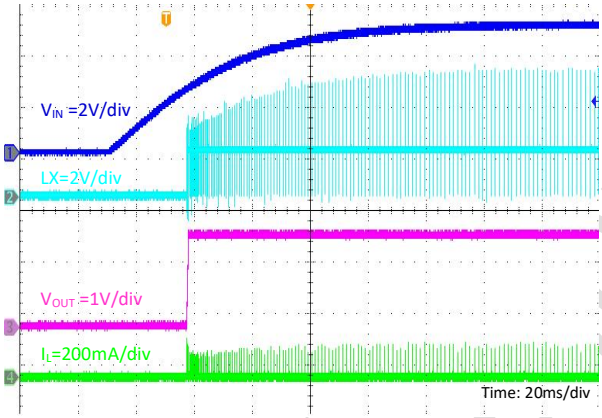

Input Power Down

V_{IN} =5V, V_{OUT} =1.8V, No Load

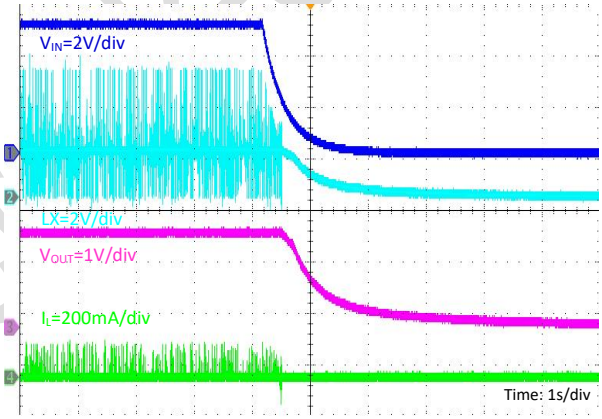

Input Power On

V_{IN} =5V, V_{OUT} =1.8V, I_o=1A

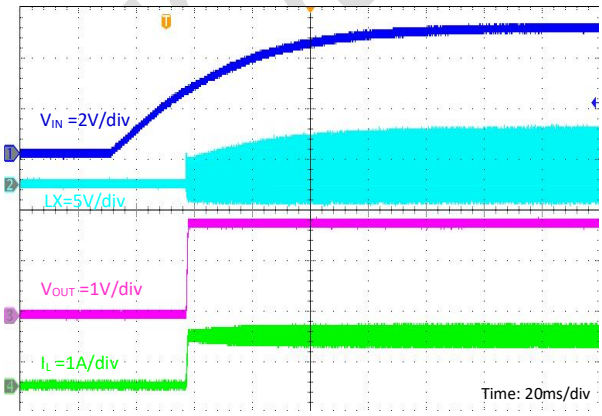

Input Power Down

V_{IN} =5V, V_{OUT} =1.8V, I_o=1A

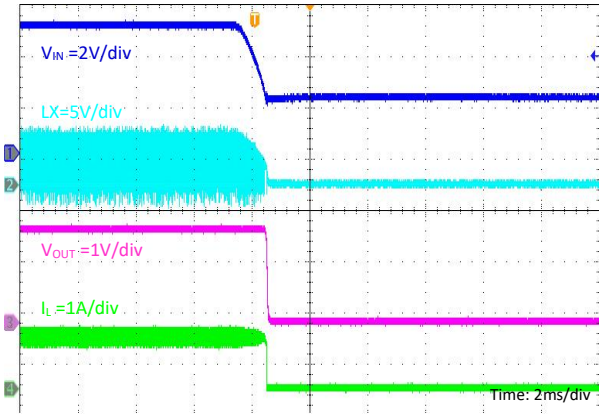

Downloaded From Oneyac.com

APPLICATION INFORMATION

Setting the Output Voltage

Figure 1 shows the basic application circuit for the TMI3408. The TMI3408 can be externally programmed. Resistors R1 and R2 in Figure 1 program the output to regulate at a voltage higher than 0.6V. The external resistor sets the output voltage according to the following equation:

$$V_{OUT} = 0.6 \times (1 + \frac{R_1}{R_2})$$

$$R_1 = (V_{OUT} / 0.6 - 1) \times R_2$$

Inductor Selection

For most designs, 2.2μH inductance can satisfy most application conditions. Inductance value is related to inductor ripple current value, input voltage, output voltage setting and switching frequency. The inductor value can be derived from the following equation:

$$L = \frac{V_{OUT} \times (V_{IN} - V_{OUT})}{V_{IN} \times \Delta I_L \times f_{OSC}}$$

Where ΔI_L is inductor ripple current. Large value inductors result in lower ripple current and small value inductors result in high ripple current, so inductor value has effect on output voltage ripple value. DC resistance of inductor which has impact on efficiency of DC/DC converter should be taken into account when selecting the inductor.

Input Capacitor Selection

The input capacitor reduces the surge current drawn from the input and switching noise from the device.

The input capacitor impedance at the switching frequency should be less than input source impedance to prevent high frequency switching current passing to the input.

A low ESR input capacitor sized for maximum RMS current must be used. Ceramic capacitors with X5R or X7R dielectrics are highly recommended because of their low ESR and small temperature coefficients.

A 4.7μF ceramic capacitor for most applications is sufficient. A large value may be used for improved input voltage filtering.

Output Capacitor Selection

The output capacitor is required to keep the output voltage ripple small and to ensure regulation loop stability. The output capacitor must have low impedance at the switching frequency. Ceramic capacitors with X5R or X7R dielectrics are recommended due to their low ESR and high ripple current ratings. The output ripple V_{OUT} is determined by:

$$\Delta V_{OUT} \le \frac{V_{OUT} \times (V_{IN} - V_{OUT})}{V_{IN} \times f_{OSC} \times L} \times \left(ESR + \frac{1}{8 \times f_{osc} \times C3} \right)$$

A 10μF ceramic can satisfy most applications.

Downloaded From Oneyac.com

Layout Consideration

When laying out the printed circuit board, the following checking should be used to ensure proper operation of the TMI3408. Check the following in your layout:

1.The power traces, consisting of the GND trace, the LX trace and the V_{IN} trace should be kept short, direct and wide.

2.Does the (+) plates of C_{IN} connect to V_{IN} as closely as possible. This capacitor provides the AC current to the internal power MOSFETs.

3.Keep the switching node, LX, away from the sensitive V_{OUT} node.

4.Keep the (-) plates of C_{IN} and C_{OUT} as close as possible

TOLL Microelectronic

Downloaded From Oneyac.com

PACKAGE INFORMATION

SOT23-5

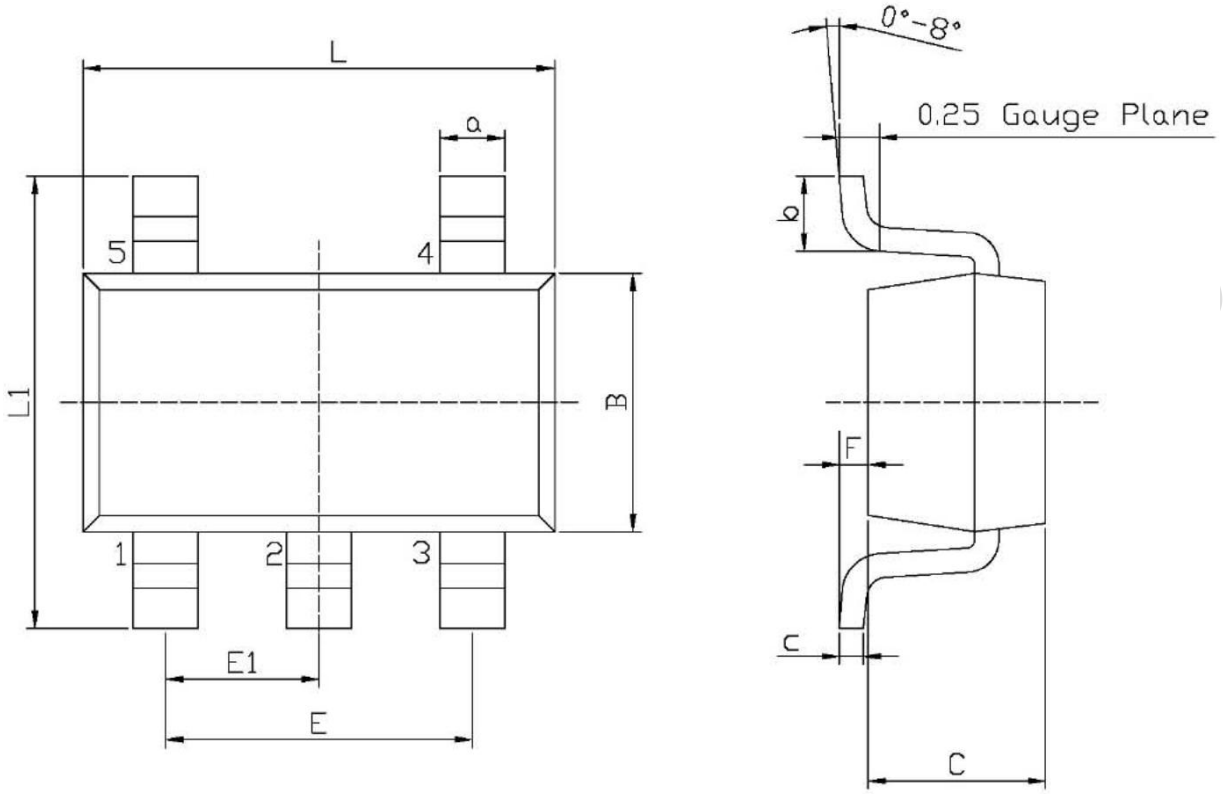

Unit: mm

Symbol	Dimensions In Millimeters		Symbol	Dimensions In Millimeters	
	Min	Max		Min	Max
L	2.82	3.02	E1	0.85	1.05
B	1.50	1.70	a	0.35	0.50
C	0.90	1.30	c	0.10	0.20
L1	2.60	3.00	b	0.35	0.55
E	1.80	2.00	F	0	0.15

Note:

1) All dimensions are in millimeters.
2) Package length does not include mold flash, protrusion or gate burr.
3) Package width does not include inter lead flash or protrusion.
4) Lead popularity (bottom of leads after forming) shall be 0.10 millimeters max.
5) Pin 1 is lower left pin when reading top mark from left to right.

Downloaded From Oneyac.com

PACKAGE INFORMATION

DFN2x2-6

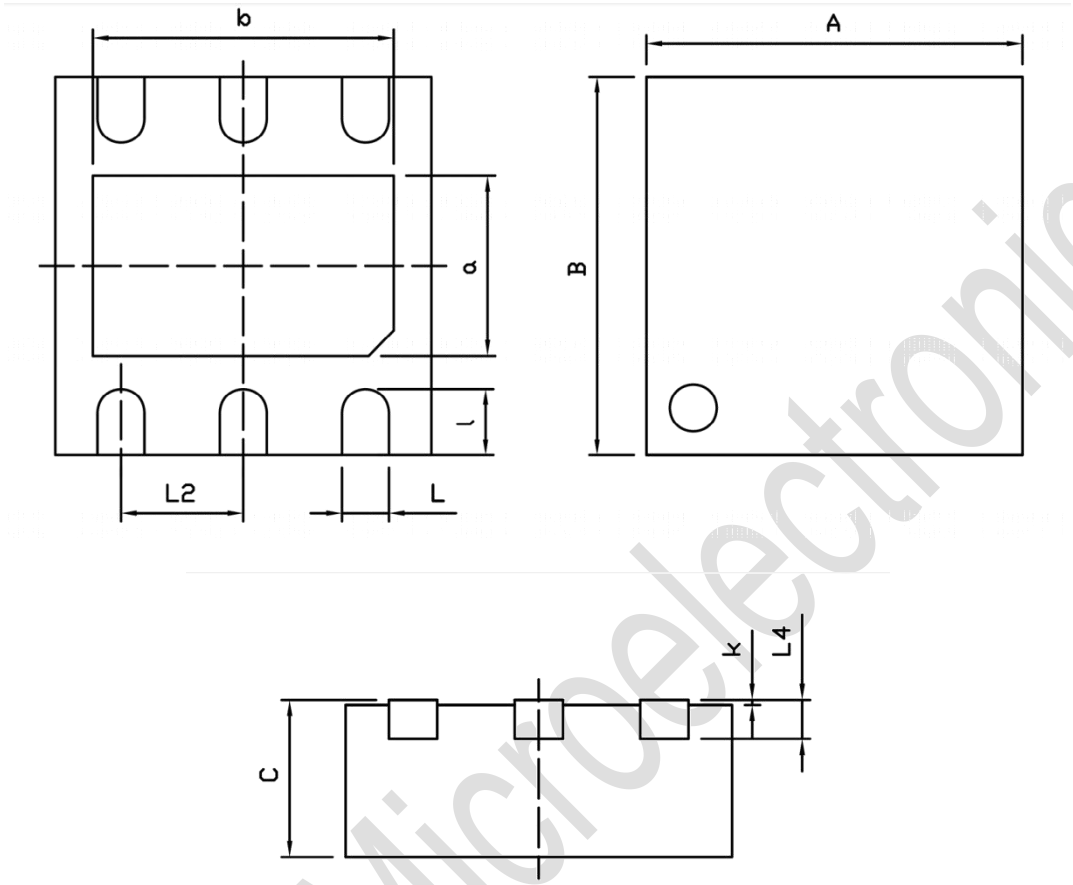

Unit: mm

Symbol	Dimensions In Millimeters			Symbol	Dimensions In Millimeters		
	Min	Nom	Max		Min	Nom	Max
A	1.95	2.00	2.05	L4	-	0.203	-
B	1.95	2.00	2.05	a	0.90	0.95	1.00
C	0.70	0.75	0.80	b	1.55	1.60	1.65
L	0.20	0.25	0.30	l	0.30	0.35	0.40
L2	-	0.65	-	k	0.00	-	0.05

Note:

1) All dimensions are in millimeters. Angles are in degree.
2) Dimensoning and tolerancing confirm to ASME Y14.5M-1994.
3) Unilateral coplanarity zone applies to the exposed heat sink slug as well as the thermals.
4) Dimension b applies to metallized terminal and is measured between 0.150mm to 0.30mm form the thermal tip. Dimension b should not be measured in radius area.
5) All specs take JEDEC MO-229 for reference.

TOLL Microelectronic

Downloaded From Oneyac.com

TAPE AND REEL INFORMATION

TAPE DIMENSIONS: SOT23-5

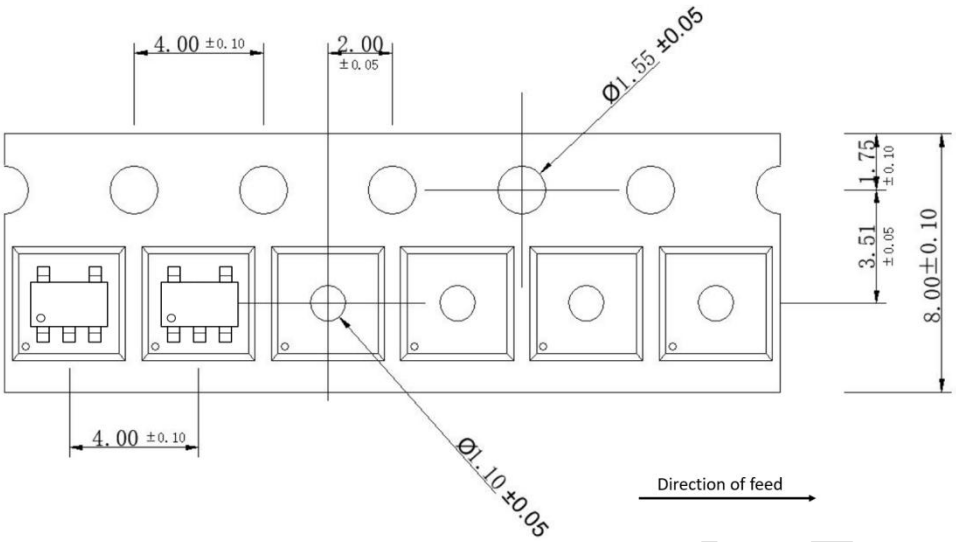

REEL DIMENSIONS: SOT23-5

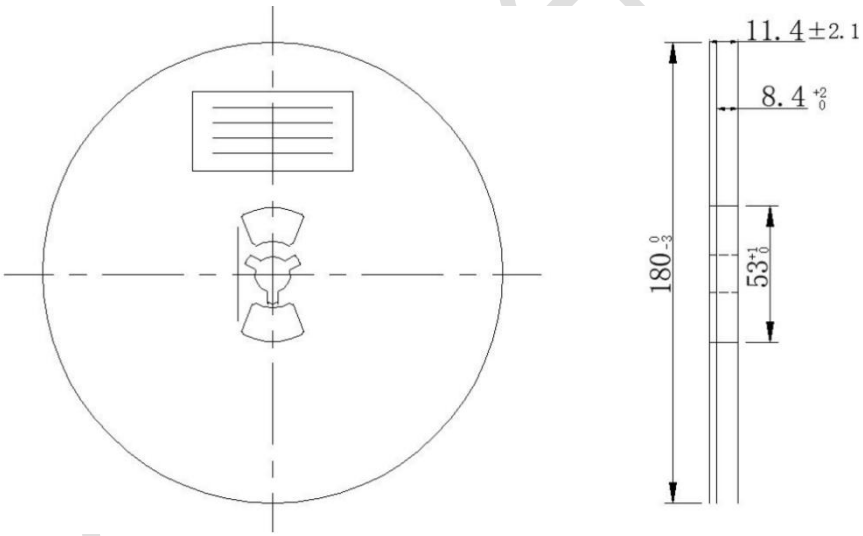

Note:

1) All Dimensions are in Millimeter
2) Quantity of Units per Reel is 3000
3) MSL level is level 3.

Downloaded From Oneyac.com

TAPE AND REEL INFORMATION

TAPE DIMENSIONS: DFN2x2-6

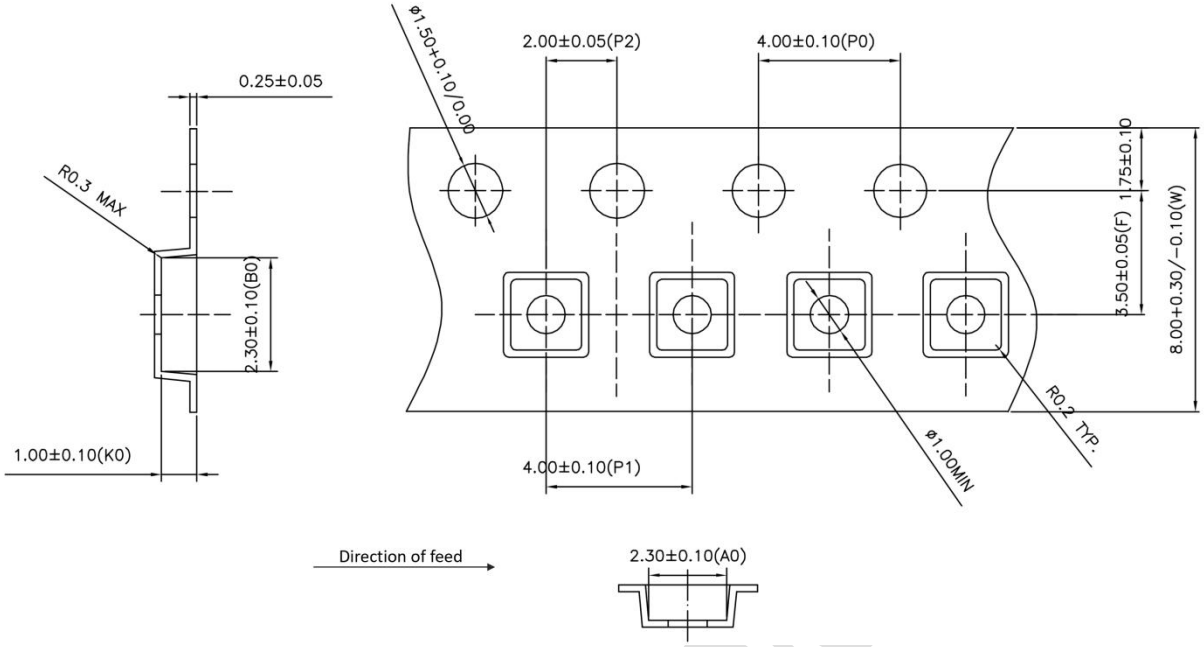

REEL DIMENSIONS: DFN2x2-6

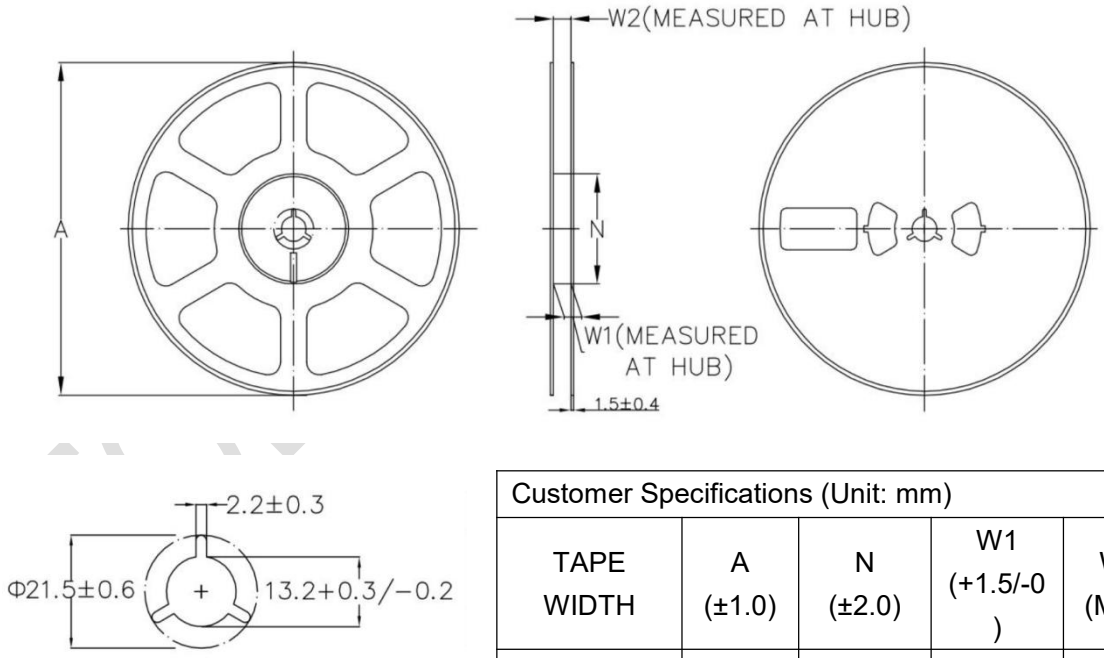

Customer Specifications (Unit: mm)				
TAPE WIDTH	A (±1.0)	N (±2.0)	W1 (+1.5/-0)	W2 (Max)
8	178.0	54.0	8.4	14.4

Note:

1) All Dimensions are in Millimeter
2) Quantity of Units per Reel is 3000
3) MSL level is level 3.

Downloaded From Oneyac.com

Important Notification

This document only provides product information. TOLL Microelectronic Inc. (TMI) reserves the right to make corrections, modifications, enhancements, improvements, and other changes to its products and to discontinue any product without notice at any time.

TOLL Microelectronic Inc. (TMI) cannot assume responsibility for use of any circuitry other than circuitry entirely embodied in a TMI product. No circuit patent licenses are implied.

All rights are reserved by TOLL Microelectronic Inc.
http:// www.toll-semi.com

TOLL Microelectronic

Downloaded From Oneyac.com

单击下面可查看定价，库存，交付和生命周期等信息

>>TMI

Downloaded From Oneyac.com