1.5MHz, 1.2A Synchronous Step-Down Converter with Force PWM Mode

FEATURES

- High Efficiency: Up to 96%(@3.3V)
- 1.5MHz Constant Frequency Operation
- Force PWM Operation
- 1.2A Output Current
- No Schottky Diode Required
- 2.5V to 5.5V Input Voltage Range
- Output Voltage as Low as 0.6V
- 100% Duty Cycle in Dropout
- Slope Compensated Current Mode Control for Excellent Line and Load Transient Response
- Short Circuit Protection
- Thermal Fault Protection
- Inrush Current Limit and Soft Start
- Input over voltage protection (OVP)
- <1μA Shutdown Current
- SOT23-5 Package

GENERAL DESCRIPTION

The TMI3408F is a constant frequency 1.5MHz, peak current mode step-down converter with force PWM operation mode. The device integrates a main switch and a synchronous rectifier for high efficiency without an external Schottky diode. The output voltage can be regulated as low as 0.6V. The TMI3408F can also run at 100% duty cycle for low dropout operation, extending battery life in portable system. This device adopts peak current mode control and force PWM mode and has fast load transient response.

APPLICATIONS

- Cellular and Smart Phones
- Wireless and DSL Modems
- PDA/MID/PAD
- Digital Still and Video Cameras

TOLL Microelectronic Inc. Confidential

TYPICAL APPILCATION

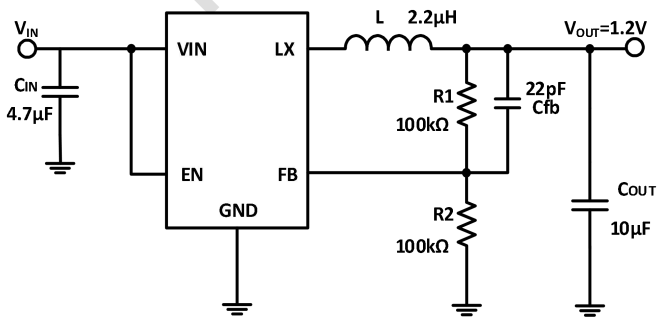

Efficiency
V_{OUT}=1.2V, L_{OUT}=2.2μH, T_A=25°C

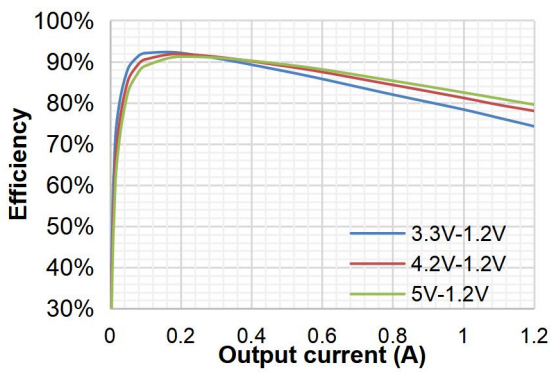

Downloaded From Oneyac.com

ABSOLUTE MAXIMUM RATINGS (Note 1)

Parameter	Value	Unit
Input Supply Voltages	-0.3~6.5	V
LX Voltages	-0.3~6.5	V
EN, FB Voltage	-0.3~6.5	V
LX Voltage (<10ns transient)	-2.5~7.0	V
LX Voltage (<5ns transient)	-3.5~7.5	V
Storage Temperature Range	-65~150	°C
Junction Temperature (Note 2)	-40~150	°C
Power Dissipation	600	mW
Lead Temperature Soldering,10Sec	260	°C

PIN CONFIGURATION

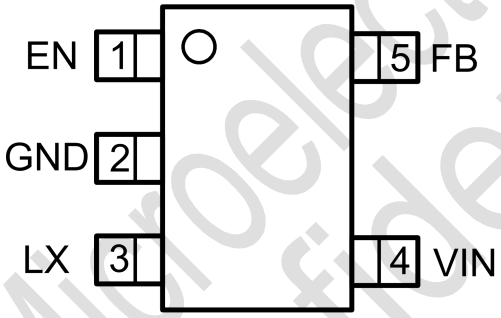

SOT23-5

Top Mark: T5FXXX (T5F: Device Code, XXX: Inside Code)

Part Number	Package	Top mark	Quantity/ Reel
TMI3408F	SOT23-5	T5FXXX	3000

TMI3408F devices are Pb-free and RoHS compliant.

TOLL Microelectronic Inc.
Confidential

Downloaded From Oneyac.com

PIN FUNCTIONS

Pin	Name	Function
1	EN	Chip Enable Pin. Drive EN above 1.5V to turn on the part. Drive EN below 0.3V to turn it off. Do not leave EN floating.
2	GND	Ground Pin
3	LX	Power Switch Output. It is the switch node connection to Inductor.
4	VIN	Power Supply Input. Must be closely decoupled to GND with a 4.7μF or greater ceramic capacitor.
5	FB	Output Voltage Feedback Pin.

ESD RATING

Items	Description	Value	Unit
V_{ESD_HBM}	Human Body Model for all pins	±2000	V
V_{ESD_CDM}	Charge Device Model for all pins	±1000	V

JEDEC specification JS-001

RECOMMENDED OPERATING CONDITIONS

Items	Description	Min	Max	Unit
Voltage Range	IN	2.5	5.5	V
T_J	Operating Junction Temperature Range	-40	125	°C

THERMAL RESISITANCE (Note 3)

Items	Description	Value	Unit
θ_{JA}	Junction-to-ambient thermal resistance	200	°C/W
θ_{JC}	Junction-to-case thermal resistance	65	°C/W

TOLL Microelectronic Inc. Confidential

Downloaded From Oneyac.com

ELECTRICAL CHARACTERISTICS

(V_{IN}=3.7V, V_{OUT}=1.2V, T_A = 25°C, unless otherwise noted.)

Parameter	Test Conditions	Min	Typ	Max	Unit
Input Voltage Range		2.5		5.5	V
OVP Threshold		5.8	6.0	6.2	V
UVLO Threshold			2.4	2.5	V
Quiescent Current	V_{EN}=2.0V, V_{FB}=V_{REF}x105%		180	300	μA
Standby Current	V_{EN}=2.0V, I_{OUT}=0A		2	6	mA
Shutdown Current	V_{EN}=0V		0.1	5	μA
Regulated Feedback Voltage	T_A = 25°C	0.588	0.600	0.612	V
Oscillation Frequency	V_{OUT}=100%		1.5		MHz
	V_{OUT}=0V		400		kHz
On Resistance of PMOS	I_{LX}=100mA		0.2		Ω
On Resistance of NMOS	I_{LX}=-100mA		0.18		Ω
Minimum On Time			90		ns
Peak Current Limit	V_{IN}=5V, V_{OUT}=1.2V, L=4.7μH/2A	1.5			A
Negative Current Limit of LS_MOSFET			-0.4		A
EN Input Low Level				0.3	V
EN Input High Level		1.5			V
EN Leakage Current			±0.01	±1.0	μA
LX Leakage Current	V_{EN}=0V, V_{IN}=V_{LX}=5V		±0.01	±1.0	μA
Thermal Shutdown Threshold (Note 4)			150		°C
Thermal Shutdown Hysteresis (Note 4)			25		°C

Note 1: Absolute Maximum Ratings are those values beyond which the life of a device may be impaired.

Note 2: T_J is calculated from the ambient temperature T_A and power dissipation P_D according to the following formula: $T_J = T_A + (P_D) \times \theta_{JA}$.

Note 3: Measured on JESD51-7, 4-layer PCB.

Note 4: Guaranteed by design.

TOLL Microelectronic Inc. Confidential

Downloaded From Oneyac.com

FUNCTION DESCRIPTION

The TMI3408F is a high performance 1.2A, 1.5MHz monolithic step-down converter with force PWM operation mode. The TMI3408F requires few external power components (C_{in}, C_{out} and L). The output voltage can be programmed with external feedback to any voltage, ranging from 0.6V to the input voltage.

At dropout, the converter duty cycle increases to 100% and the output voltage tracks the input voltage minus the $R_{DS(ON)}$ drop of the high-side MOSFET.

The internal error amplifier and compensation provides excellent transient response, load, and line regulation. Soft start function prevents input inrush current and output overshoot during start up.

FUNCTIONAL BLOCK DIAGRAM

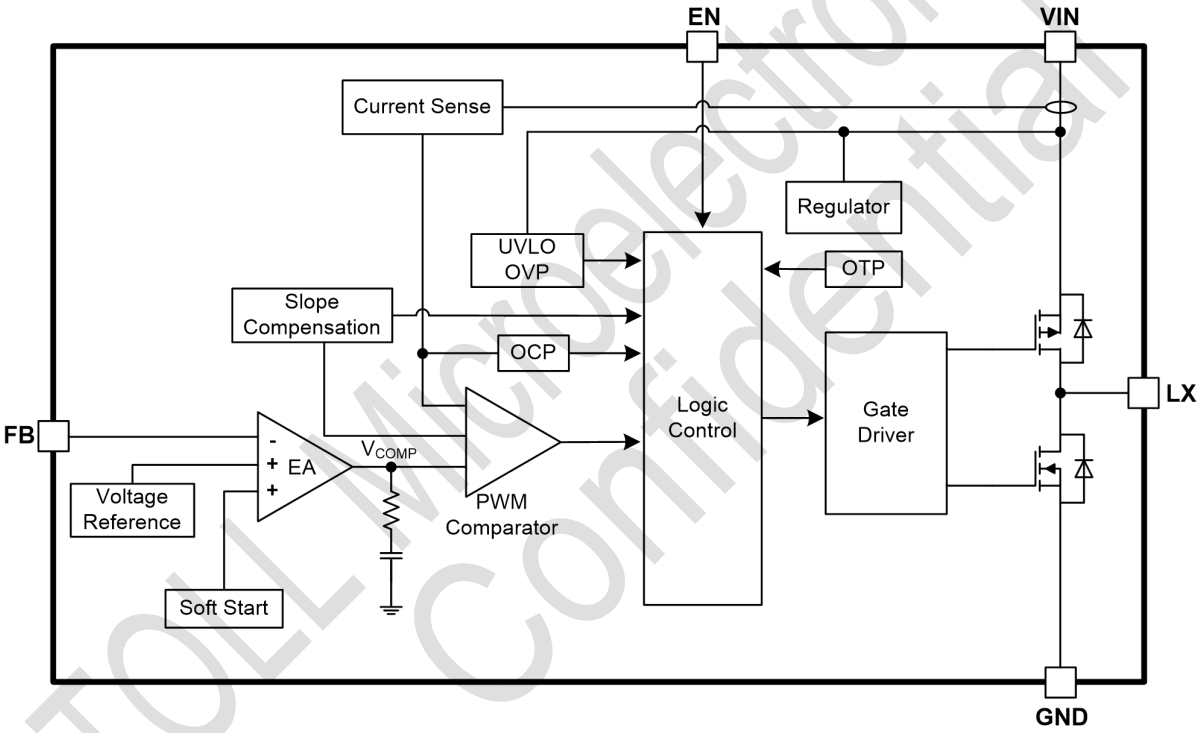

Figure 2. TMI3408F Block Diagram

TOLL Microelectronic Inc. Confidential

Downloaded From Oneyac.com

APPLICATION INFORMATION

Setting the Output Voltage

Figure 1 shows the basic application circuit for the TMI3408F. The TMI3408F can be externally programmed. Resistors R1 and R2 in Figure 1 program the output to regulate at a voltage higher than 0.6V. The external resistor sets the output voltage according to the following equation:

$$V_{OUT} = 0.6 \times (1 + \frac{R_1}{R_2})$$

$$R_1 = (V_{OUT} / 0.6 - 1) \times R_2$$

Inductor Selection

For most designs, 2.2μH inductance can satisfy most application conditions. Inductance value is related to inductor ripple current value, input voltage, output voltage setting and switching frequency. The inductor value can be derived from the following equation:

$$L = \frac{V_{OUT} \times (V_{IN} - V_{OUT})}{V_{IN} \times \Delta I_L \times f_{OSC}}$$

Where ΔI_L is inductor ripple current. Large value inductors result in lower ripple current and small value inductors result in high ripple current, so inductor value has effect on output voltage ripple value. TMI3408F is force PWM operation mode. In dull load condition, the average inductor current is zero and valley inductor current is $-\Delta I_L/2$. The larger inductance value, the more negative valley inductor current. Because of the negative valley inductor current limitation, the recommended smallest inductance value for TMI3408F application is 2.2μH or larger inductance.

Input Capacitor Selection

The input capacitor reduces the surge current drawn from the input and switching noise from the device.

The input capacitor impedance at the switching frequency should be less than input source impedance to prevent high frequency switching current passing to the input.

A low ESR input capacitor sized for maximum RMS current must be used. Ceramic capacitors with X5R or X7R dielectrics are highly recommended because of their low ESR and small temperature coefficients.

A 4.7μF ceramic capacitor for most applications is sufficient. A large value may be used for improved input voltage filtering.

Output Capacitor Selection

The output capacitor is required to keep the output voltage ripple small and to ensure regulation loop stability. The output capacitor must have low impedance at the switching frequency. Ceramic capacitors with X5R or X7R dielectrics are recommended due to their low ESR and high ripple current ratings. The output ripple V_{OUT} is determined by:

$$\Delta V_{OUT} \le \frac{V_{OUT} \times (V_{IN} - V_{OUT})}{V_{IN} \times f_{OSC} \times L} \times \left(ESR + \frac{1}{8 \times f_{osc} \times C3} \right)$$

TOLL Microelectronic Inc. Confidential

Downloaded From Oneyac.com

An effective 10μF or larger value ceramic capacitor can satisfy most applications.

Layout Consideration

When laying out the printed circuit board, the Following checking should be used to ensure proper operation of the TMI3408F. Check the following in your layout:

1. The power traces, consisting of the GND trace, the LX trace and the IN trace should be kept short, direct and wide.
2. Does the (+) plates of C_{in} connect to IN as closely as possible. This capacitor provides the AC current to the internal power MOSFETs.
3. Keep the switching node, LX, away from the sensitive VOUT node.
4. Keep the (-) plates of C_{in} and C_{out} as close as possible

TOLL Microelectronic Inc.
Confidential

Downloaded From Oneyac.com

TYPICAL PERFORMANCE CHARACTERISTICS

Test condition: V_{IN}=5V, V_{OUT}=1.2V, L=2.2μH, T_A=+25°C, unless other noted.

Efficiency at V_{OUT} = 3.3V

V_{OUT}=3.3V, T_A=25°C

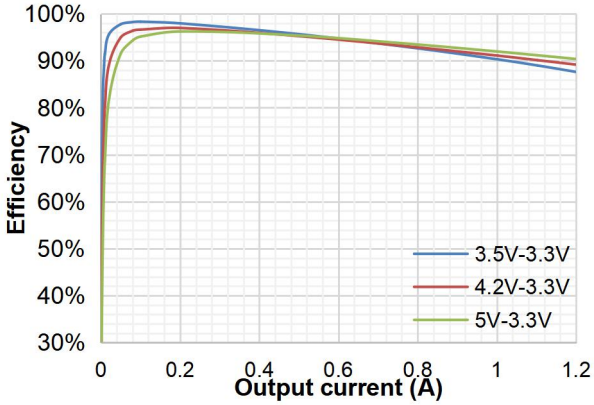

Efficiency at V_{OUT} = 1V

V_{OUT}=1V, T_A=25°C

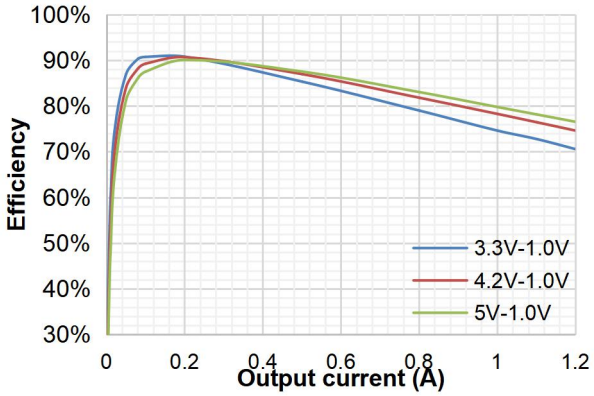

Efficiency at V_{OUT} = 1.2V

V_{OUT}=1.2V, T_A=25°C

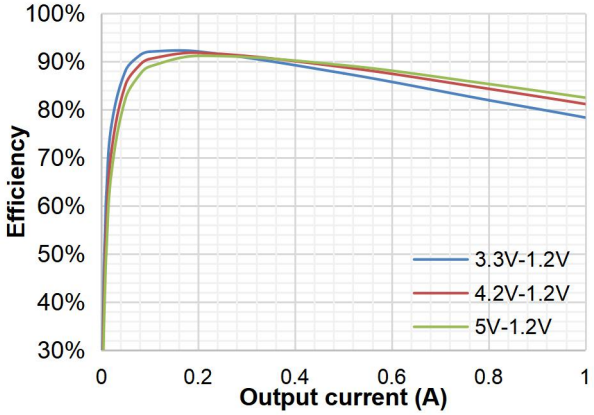

Efficiency at V_{OUT} = 1.8V

V_{OUT}=1.8V, T_A=25°C

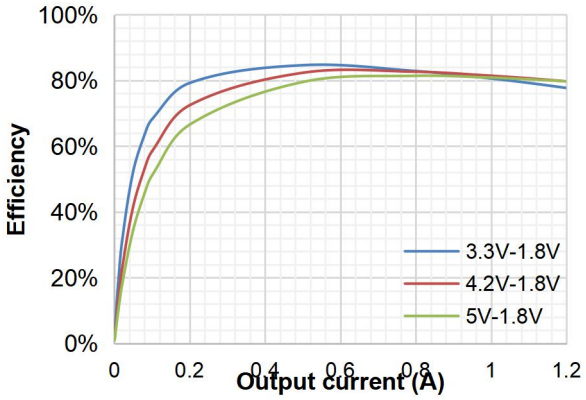

Load Regulation

V_{IN}=5V, L=2.2μH, DCR=20mΩ

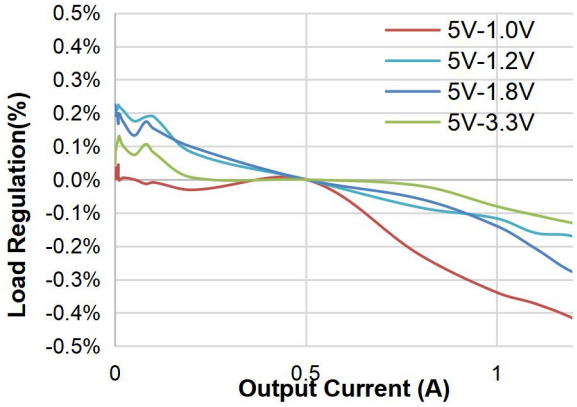

Line Regulation at V_{OUT} = 1.2V

V_{OUT} =1.2V, L=2.2μH, T_A=25°C

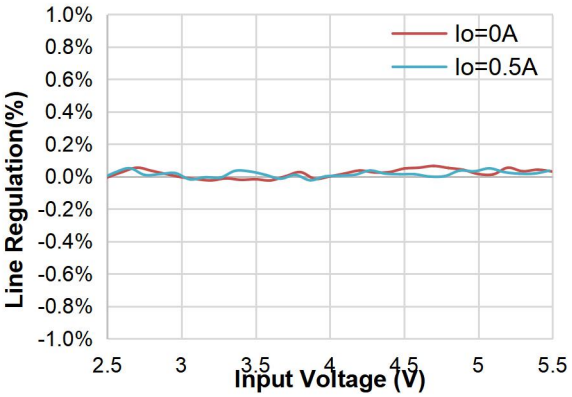

Downloaded From Oneyac.com

TYPICAL PERFORMANCE CHARACTERISTICS (continued)

Steady State Operation

V_{IN} =5V, V_{OUT} =1.2V, No Load

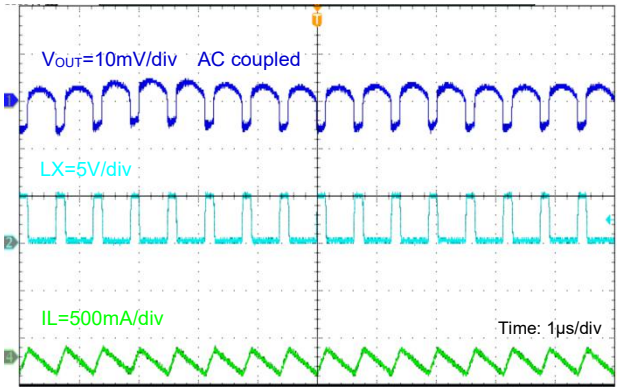

Steady State Operation

V_{IN} =5V, V_{OUT} =1.2V, I_o=1A

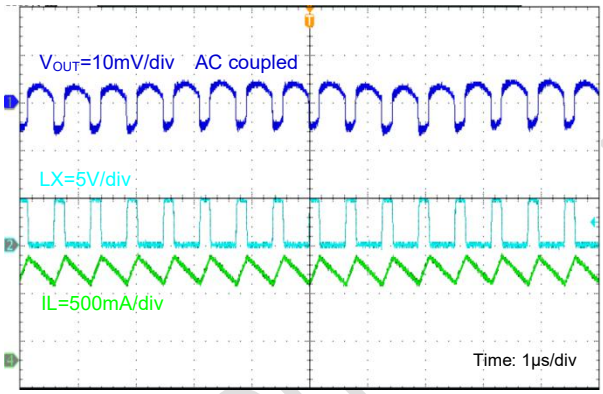

Load Transient

V_{IN} =5V, V_{OUT} =1.2V, I_o =0A to 1.2A

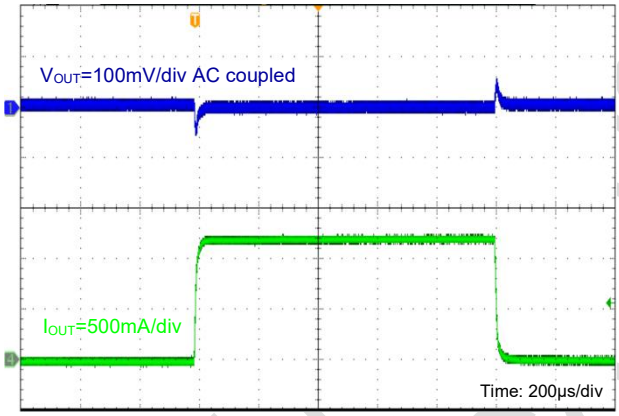

Load Transient

V_{IN} =5V, V_{OUT} =1.2V, I_o =0A to 0.6A

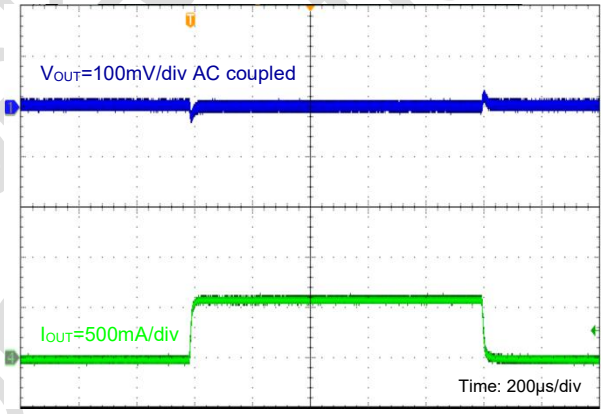

Input Power On

V_{IN} =5V, V_{OUT} =1.2V, I_o =0A

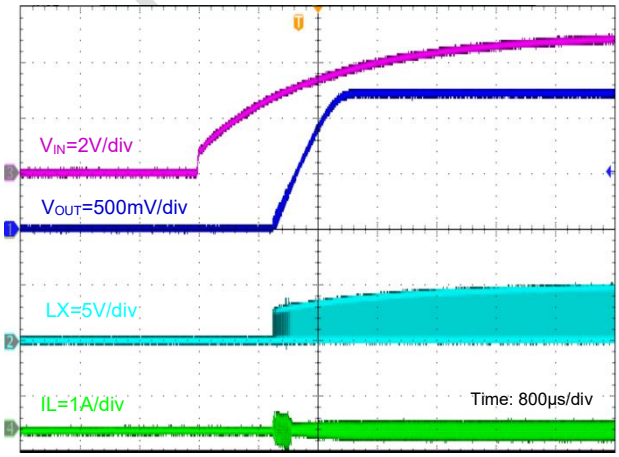

Input Power Down

V_{IN} =5V, V_{OUT} =1.2V, I_o =0A

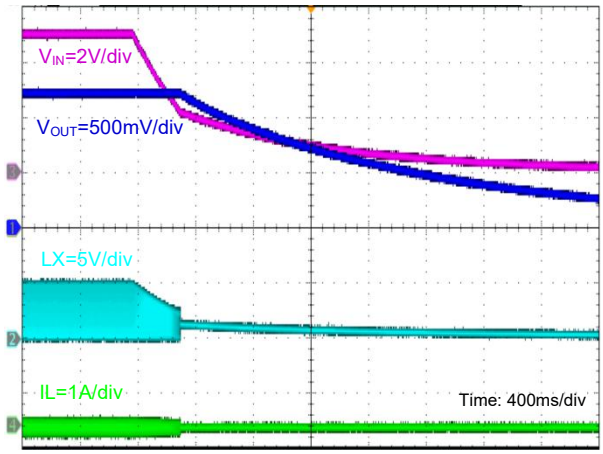

TOLL Confidential

Downloaded From Oneyac.com

TYPICAL PERFORMANCE CHARACTERISTICS (continued)

Input Power On

V_{IN} =5V, V_{OUT} =1.2V, R_o =1.2Ω

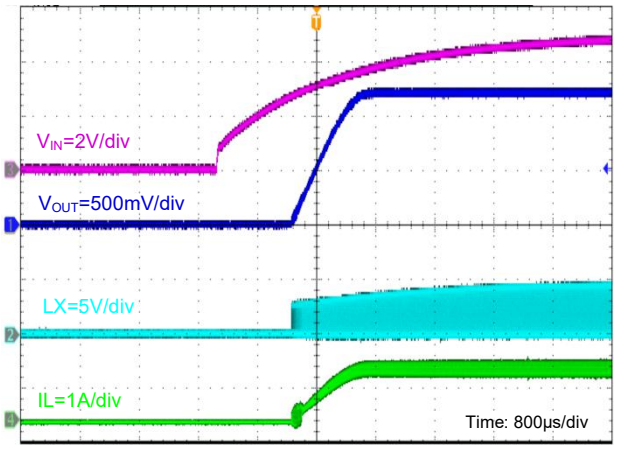

Input Power Down

V_{IN} =5V, V_{OUT} =1.2V, R_o =1.2Ω

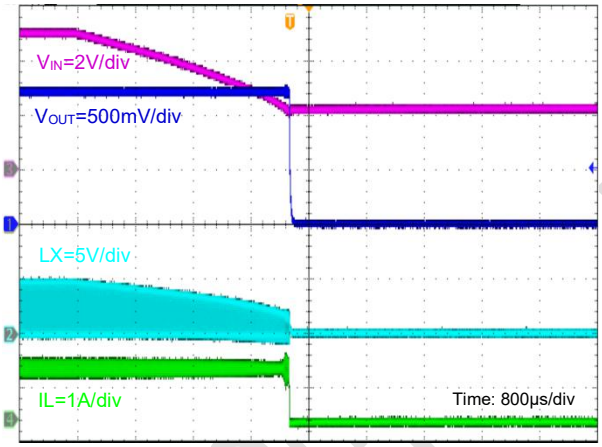

EN Enable

V_{IN} =5V, V_{OUT} =1.2V, R_o =1.2Ω

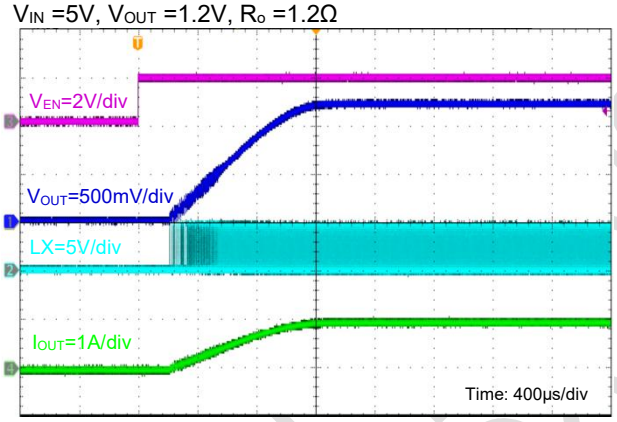

EN Disable

V_{IN} =5V, V_{OUT} =1.2V, R_o =1.2Ω

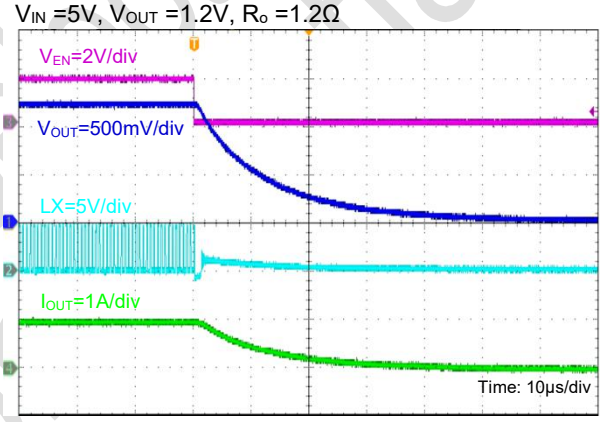

Output Short Entry

V_{IN} =5V, V_{OUT} =1.2V, I_{OUT} =1A

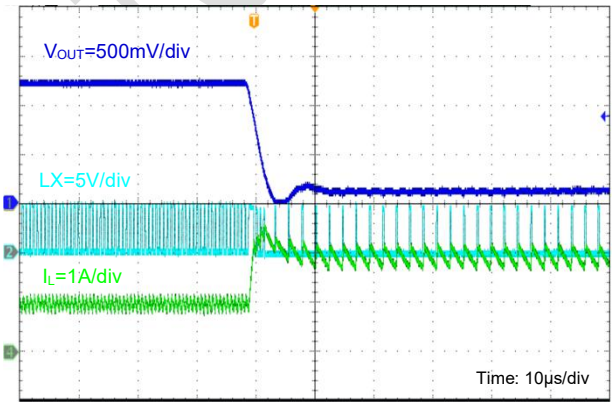

Output Short Recovery

V_{IN} =5V, V_{OUT} =1.2V, I_{OUT} =1A

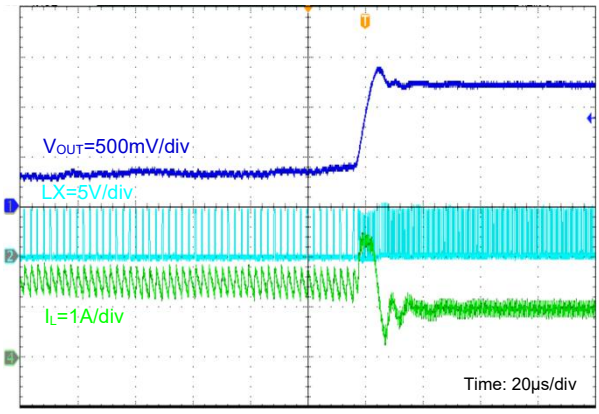

TOLL Confidential

Downloaded From Oneyac.com

PACKAGE INFORMATION

SOT23-5

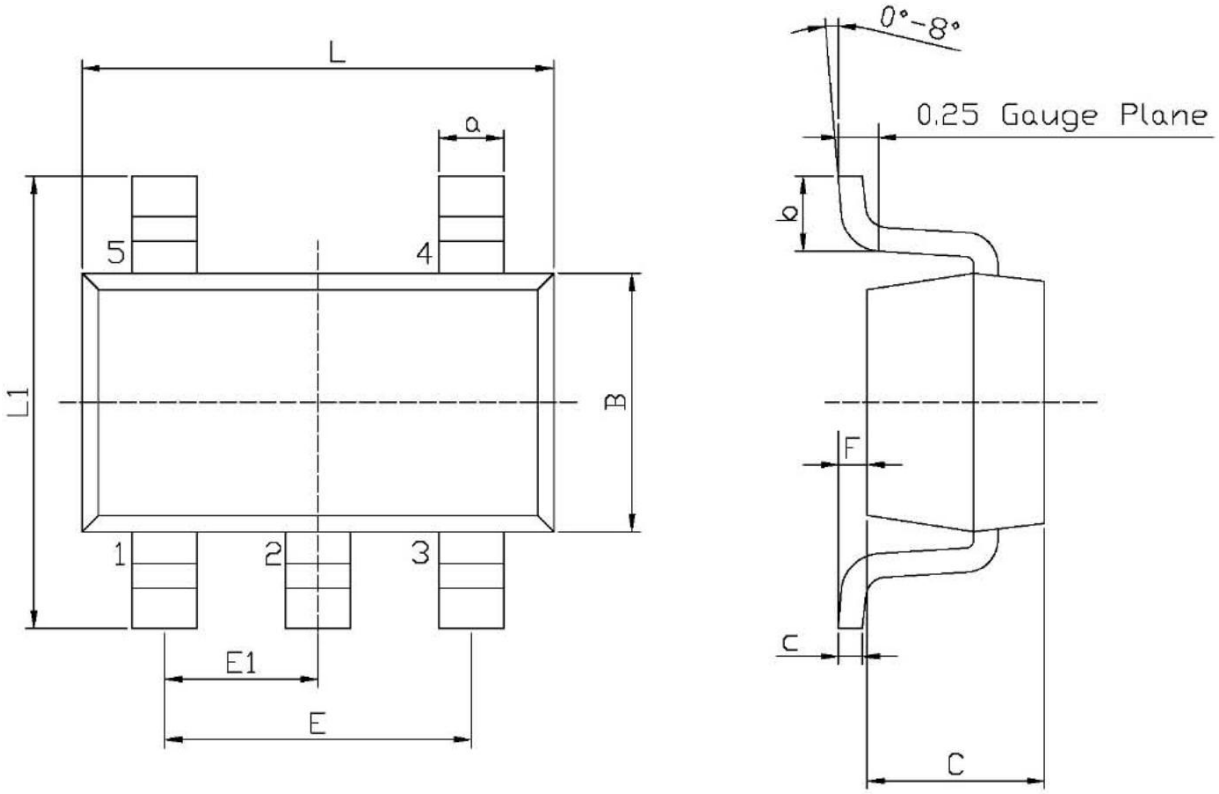

Unit: mm

Symbol	Dimensions In Millimeters		Symbol	Dimensions In Millimeters	
	Min	Max		Min	Max
L	2.82	3.02	E1	0.85	1.05
B	1.50	1.70	a	0.35	0.50
C	0.90	1.30	c	0.10	0.20
L1	2.60	3.00	b	0.35	0.55
E	1.80	2.00	F	0	0.15

Note:

1) All dimensions are in millimeters.
2) Package length does not include mold flash, protrusion or gate burr.
3) Package width does not include inter lead flash or protrusion.
4) Lead popularity (bottom of leads after forming) shall be 0.10 millimeters max.
5) Pin 1 is lower left pin when reading top mark from left to right.

Downloaded From Oneyac.com

TAPE AND REEL INFORMATION

TAPE DIMENSIONS:

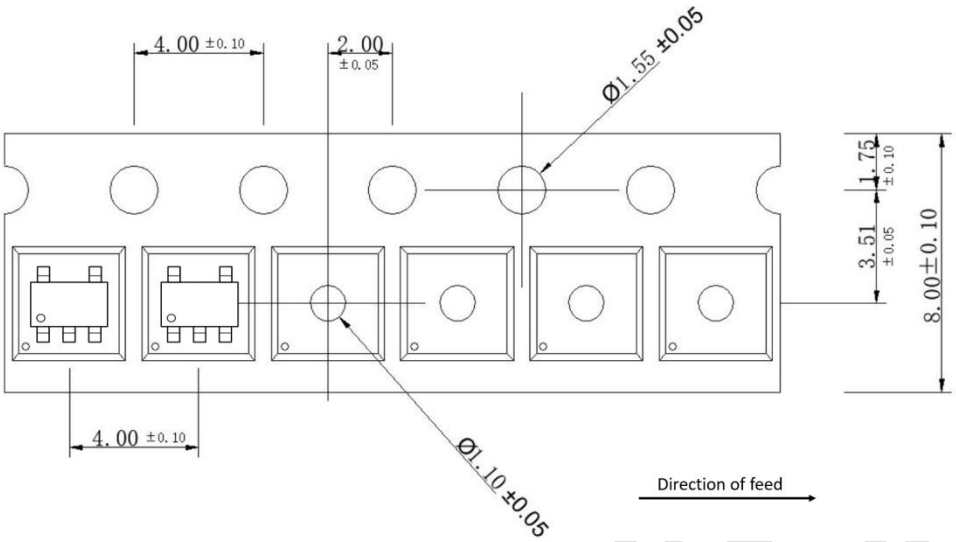

REEL DIMENSIONS:

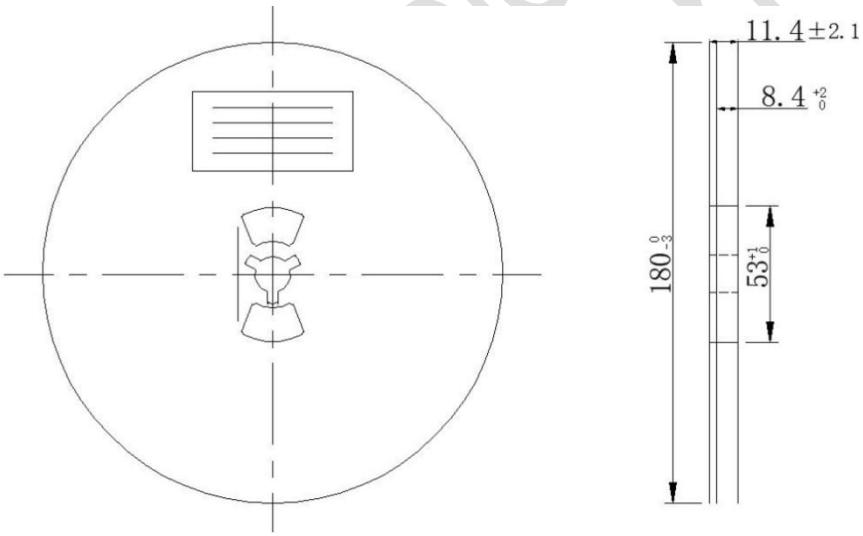

Note:

1) All Dimensions are in Millimeter
2) Quantity of Units per Reel is 3000
3) MSL level is level 3.

Downloaded From Oneyac.com

单击下面可查看定价，库存，交付和生命周期等信息

>>TMI

Downloaded From Oneyac.com