15KPxx(C)A

Power Transient Voltage Suppressor

Features

- 15000 watts Peak Pulse Power (10/1000μs)
- Unidirectional and Bidirectional Protection
- Fast Response Time :Typically < 1ns
- Excellent Clamping Capability
- Glass Passivated Junction in P600 Package
- Low incremental surge resistance
- Plastic package has Underwriters Laboratory Flammability classification 94V-0
- High temperature soldering guaranteed:260° C /10 seconds/.375”,(9.5mm) lead length/5lbs.,(2.3kg) tension

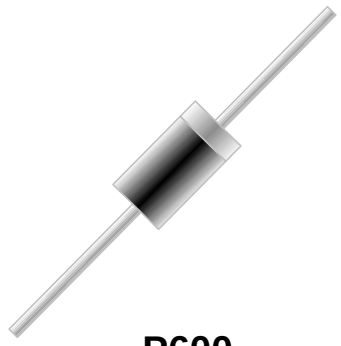

P600

Mechanical Characteristics

- JEDEC P600 molded plastic
- Polarity: Color band denoted cathode except Bipolar
- Marking : Marking Code
- Mounting Position: Any
- RoHS &UL497B Compliant

Applications

- I/O Interfaces
- Power lines
- Automotive and Telecommunication
- Signal lines of sensor units for consumer
- Industrial Electronics
- Computer

Absolute Maximum Rating

Rating	Symbol	Value	Units
Peak Pulse Power (t_p =10/1000μs) (see Note1)	P_{PPM}	15000	W
Peak pulse current (10/1000μs) (see Note1)	I_{PPM}	See Electrical Characteristics	A
Power Dissipation on infinite heat sink T_L = 50 °C (Fig4)	P_D	10.0	W
Operating Junction Temperature range	T_J	-55 to + 175	°C
Typical Thermal Resistance Junction to Lead	R_{uJL}	8.0	°C/W

Note1: Non-repetitive current pulse, per Fig.3 and derated above T_A=25°C per Fig.2.

Downloaded From Oneyac.com

Electrical Characteristics

Part Number		Reverse Stand off Voltage V_{RWM}	Breakdown Voltage V_{BR}(Volts)@I_T		Test Current I_T	Maximum Clamping Voltage V_c@I_{PP}	Maximum Peak Pulse Current I_{PP}	Maximum Reverse Leakage I_R@V_{RWM}
UNI-POLAR	BI-POLAR	(V)	MIN	MAX	(mA)	(V)	(A)	(μA)
15KP17A	15KP17CA	17	18.9	20.8	50	29.3	512	5000
15KP18A	15KP18CA	18	20.0	22.1	50	30.9	485	5000
15KP20A	15KP20CA	20	22.2	24.5	20	34.3	437	1500
15KP22A	15KP22CA	22	24.4	27.0	10	37.1	404	500
15KP24A	15KP24CA	24	26.7	29.4	5	40.5	369	150
15KP26A	15KP26CA	26	28.9	31.8	5	44.0	347	50
15KP28A	15KP28CA	28	31.1	34.3	5	47.5	316	25
15KP30A	15KP30CA	30	33.3	36.7	5	50.7	296	15
15KP33A	15KP33CA	33	36.7	40.4	5	54.8	274	10
15KP36A	15KP36CA	36	40.0	44.0	5	59.7	251	10
15KP40A	15KP40CA	40	44.4	48.9	5	65.8	228	10
15KP43A	15KP43CA	43	47.8	52.6	5	69.7	215	10
15KP45A	15KP45CA	45	50.0	55.0	5	73.0	205	10
15KP48A	15KP48CA	48	53.3	58.7	5	77.7	193	10
15KP51A	15KP51CA	51	56.7	62.4	5	82.8	181	10
15KP54A	15KP54CA	54	60.0	66.0	5	87.5	171	10
15KP58A	15KP58CA	15	64.4	70.9	5	94.0	160	10
15KP60A	15KP60CA	60	66.7	73.4	5	97.3	154	10
15KP64A	15KP64CA	64	71.1	78.3	5	104.0	144	10
15KP70A	15KP70CA	70	77.8	85.6	5	114.0	132	10
15KP75A	15KP75CA	75	83.3	91.7	5	122.0	123	10
15KP78A	15KP78CA	78	86.7	95.4	5	126.0	119	10
15KP85A	15KP85CA	85	94.4	104.0	5	137.0	109	10
15KP90A	15KP90CA	90	100	110.1	5	146.0	103	10
15KP100A	15KP100CA	100	111	122.3	5	162.0	93	10
15KP110A	15KP110CA	110	122	134.5	5	178.0	84	10
15KP120A	15KP120CA	120	133	146.8	5	193.0	78	10

Downloaded From Oneyac.com

Electrical Characteristics (Cont.)

Part Number		Reverse Stand off Voltage V_{RWM} (V)	Breakdown Voltage V_{BR}(Volts)@I_T		Test Current I_T (mA)	Maximum Clamping Voltage V_c@I_{PP} (V)	Maximum Peak Pulse Current I_{PP} (A)	Maximum Reverse Leakage I_R@V_{RWM} (μA)
UNI-POLAR	BI-POLAR		MIN	MAX				
15KP130A	15KP130CA	130	144	159.0	5	209.0	72	10
15KP150A	15KP150CA	150	167	183.5	5	243.0	62	10
15KP160A	15KP160CA	160	178	195.7	5	259.0	58	10
15KP170A	15KP170CA	170	189	207.9	5	275.0	55	10
15KP180A	15KP180CA	180	200	220.1	5	291.0	52	10
15KP200A	15KP200CA	200	209	244.6	5	322.0	47	10
15KP220A	15KP220CA	220	222	269.1	5	356.0	42	10
15KP240A	15KP240CA	240	267	293.5	5	388.0	39	10
15KP260A	15KP260CA	260	289	318.0	5	419.0	36	10
15KP280A	15KP280CA	280	311	342.4	5	452.0	33	10

For bidirectional type V_R of 10 volts and less, the I_R limit is double.

For parts without A, the V_{BR} is ± 10% and V_C is 5% higher than with A parts.

Downloaded From Oneyac.com

Typical Characteristics

Figure 1. Peak Pulse Power Rating Curve

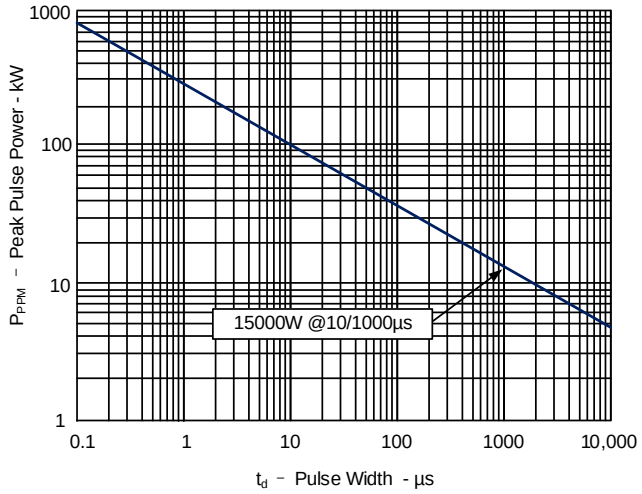

Figure 2. Pulse Derating Curve

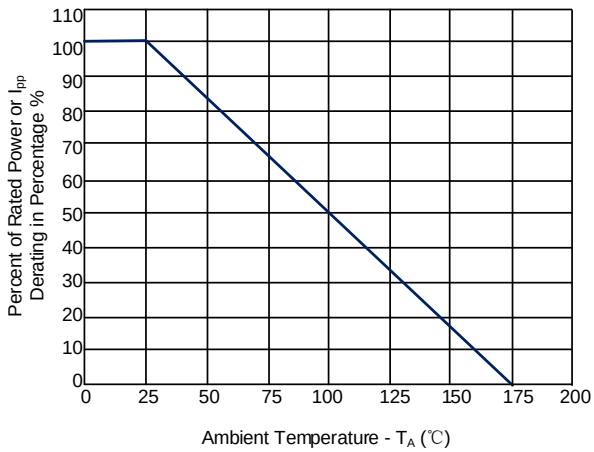

Figure 3. Pulse Waveform

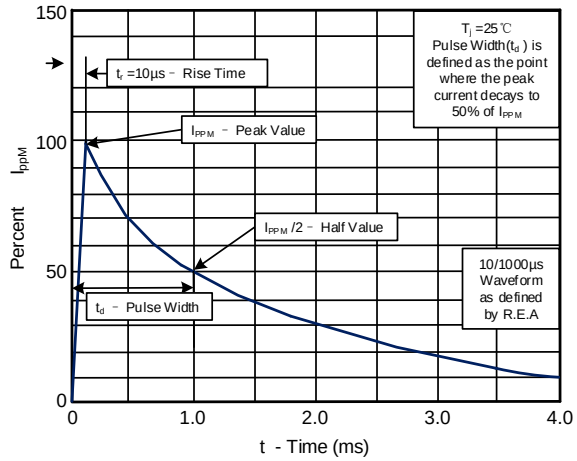

Figure 4. Steady State Power Dissipation Derating Curve

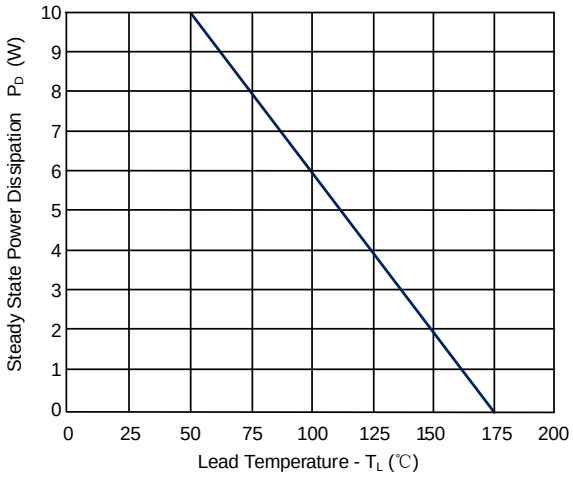

Downloaded From Oneyac.com

Soldering Parameters

Condition		
Pre-Heat	Temperature Min ($T_{s(min)}$)	150°C
	Temperature Max ($T_{s(max)}$)	200°C
	Time (min to max) (t_s)	60-190 s
Average ramp up rate (Liquidus Temp) (T_L) to peak		3°C/s max
Ts(max) to TL - Ramp-up Rate		3°C/s max
Reflow	Temperature (T_L) (Liquidus)	217°C
	Temperature (t_L)	60-150 s
Peak Temperature (T_P)		$260^{+0/-5}$ °C
Time within actual peak Temperature (t_p)		20-40 s
Ramp-down Rate		5°C/s max
Time 25°C to peak Temperature (T_P)		8 minutes max
Do not exceed		260°C

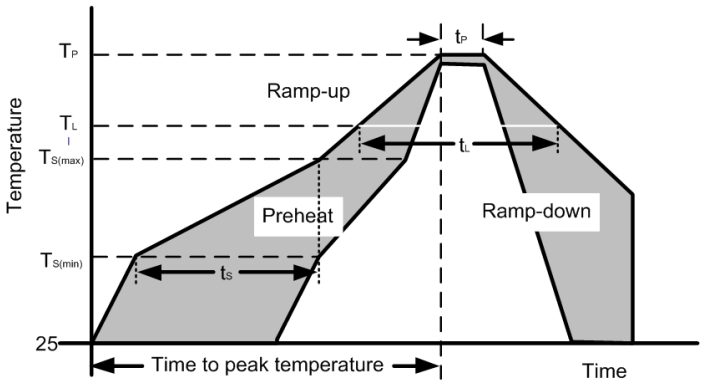

Outline Drawing - P600

Ref.(mm)	Millimeters	
	Min.	Max.
A	25.40	-
B	8.60	9.10
C	1.22	1.32
D	8.60	9.10

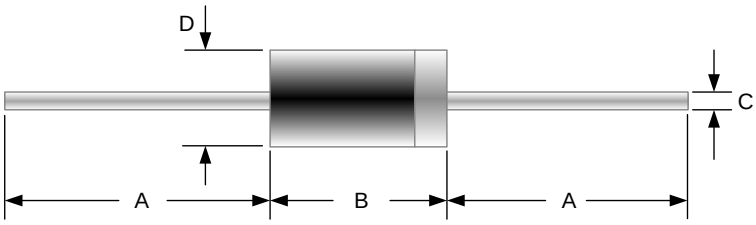

Part Numbering System

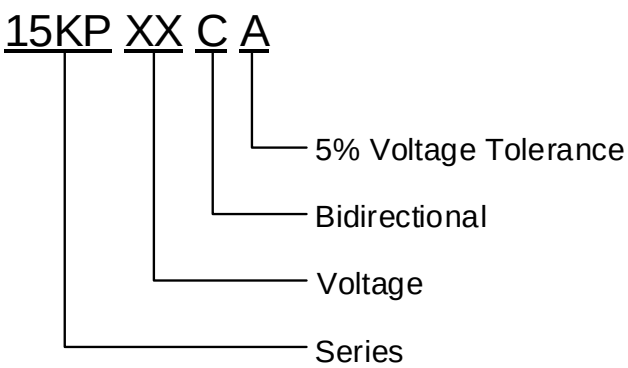

Downloaded From Oneyac.com

Part Marking System

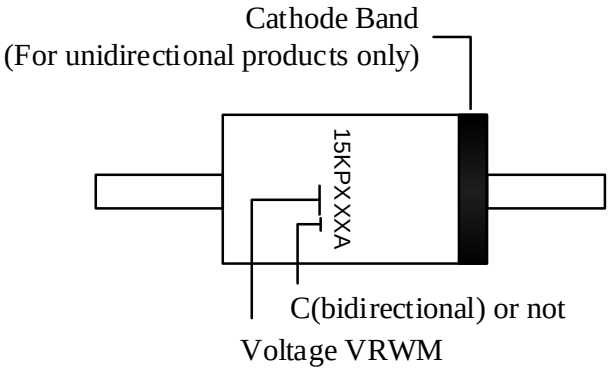

Package Information

Package Type	Description	Quantity (pcs)
P-600	Tape & Box	300

Contact Information

No.1001, Shiwan(7) Road, Pudong District, Shanghai, P.R.China.201207
Tel: +86-21-68969993 Fax: 86-21-50757680 Email: market@way-on.com
WAYON website: **http://www.way-on.com**
For additional information, please contact your local Sales Representative.

WAYON ® is registered trademarks of Wayon Corporation.

Specifications are subject to change without notice.
The device characteristics and parameters in this data sheet can and do vary in different applications and actual device performance may vary over time.
Users should verify actual device performance in their specific applications.

Downloaded From Oneyac.com

单击下面可查看定价，库存，交付和生命周期等信息

>>WAY-ON(维安)

Downloaded From Oneyac.com