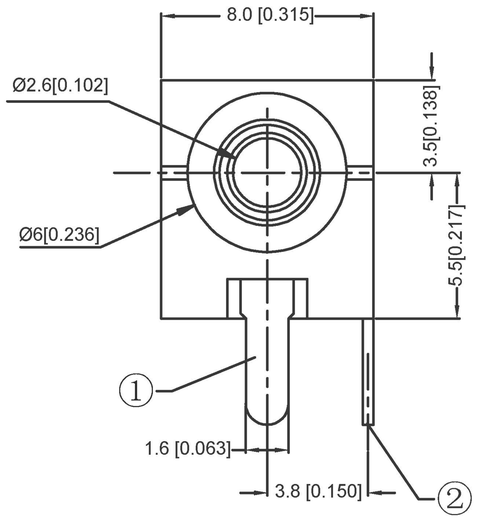

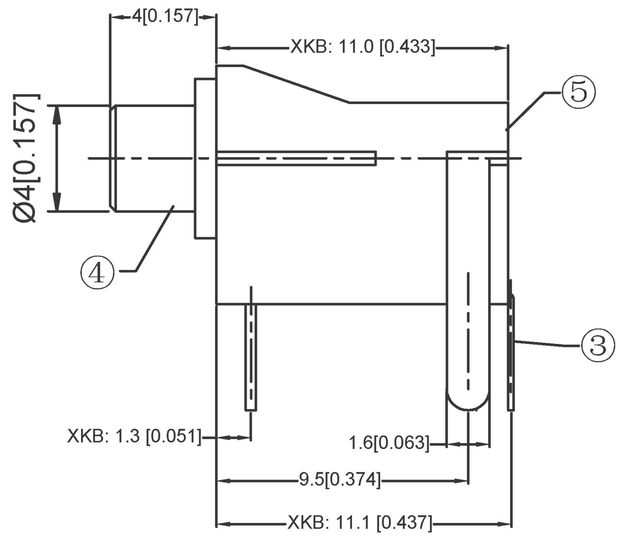

SPECIFICATION
产品规格

1.Rating: DC 30V 0.5A
额定值: DC 30V 0.5A
2.Contact resistance :<0.03;
接触电阻:<0.03 ;
3.Insulation resistance: >100MΩ(DC250V)
绝缘电阻: >100MΩ(DC250V)
4.Withstand voltage :500VAC;
耐受电压: 500VAC;
5.Insertion and extraction force:3-20N;
插拔力:3-20N;
6.life test:5,000 cycles.
寿命试验：5000次循环.

PCB

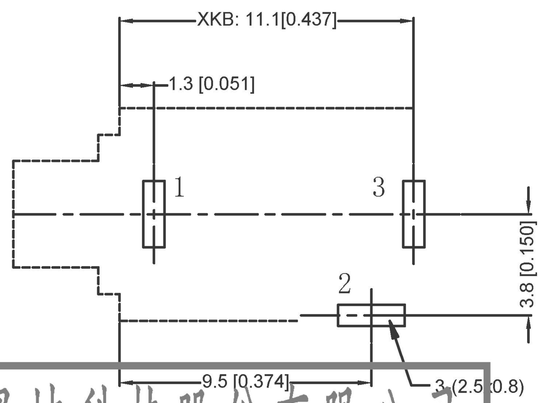

PIN	PJ-2020
Schematic	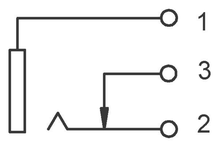

	MATERIAL	PLATING
terminal 1	copper alloy	silver
terminal 2	copper alloy	silver
terminal 3	copper alloy	silver
terminal 4	copper alloy	silver
plastic	PA10T	

广东星坤科技股份有限公司
生效日期
文件工程章

MARK	DESCRIPTION	DATE	REVISED	APPROVED

REVISIONS

UNSPECIFIED TOLERANCES	
ANGLAR	±5°
L≤4	±0.2
4<L≤16	±0.3
16<L≤63	±0.4
L>63	±0.5

www.xk-dg.cn www.helloxkb.com www.helloxkb.cn

DSND		DATE		SCALE: N/A	MODEL TYPE: 3.5 PHONE JACK
DWN		DATE		VIEW:	PART NO.:
CHKD		DATE		UNIT: mm/in	DWG NO.: PJ-2020
APPD		DATE		SIZE: A4	

XKB INDUSTRIAL PRECISION CO.,LIMITED

WEIGHT	SHEET	REVISION
1.0g	1/1	A0

单击下面可查看定价，库存，交付和生命周期等信息

>>XKB Connectivity(中国星坤)

Downloaded From Oneyac.com