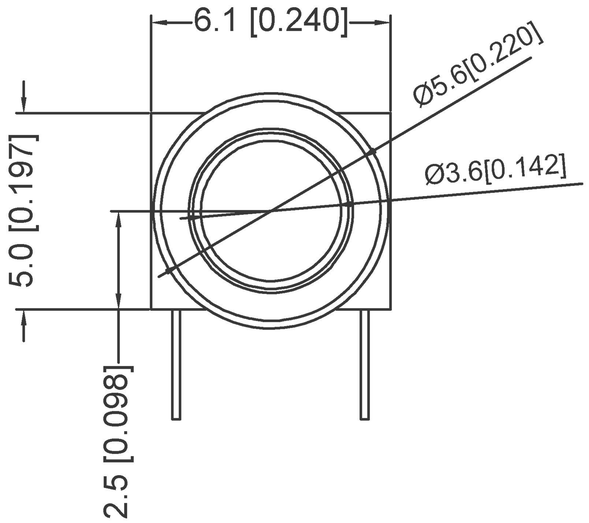

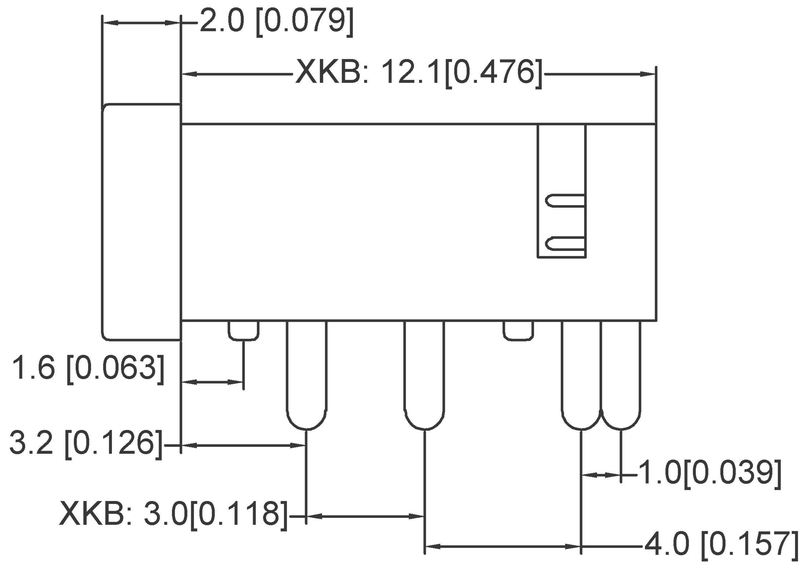

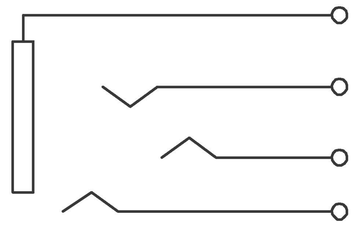

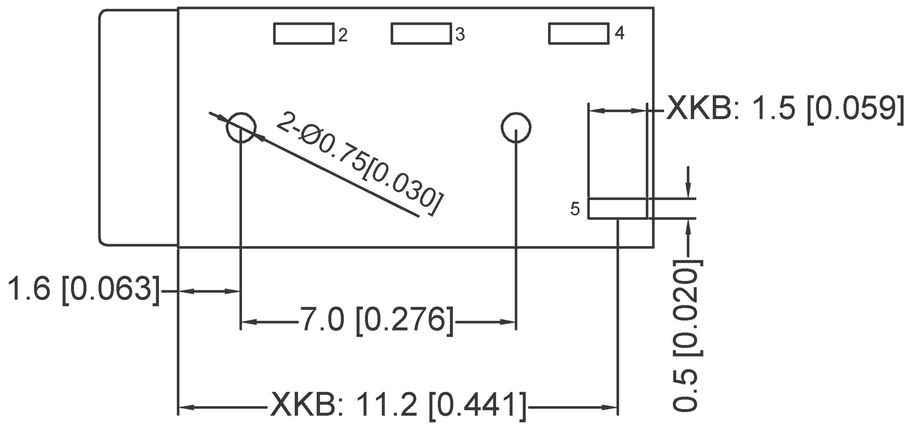

	MATERIAL	PLATING
terminal 2	H65	tin
terminal 3	H65	tin
terminal 4	H65	tin
terminal 5	H65	tin
plastic	LCP	

广东星坤科技股份有限公司

生		日
ΔX		期
ΔX		
ΔX		

文件工程章

MARK	DESCRIPTION	DATE	REVISED	APPROVED

REVISIONS

ANGLAR	±5°
X.X	±0.2mm
X.XX	±0.1mm
X.XXX	±0.05mm

UNSPECIFIED TOLERANCES

www.xk-dg.cn www.helloxkb.com www.helloxkb.cn

DSND		DATE		SCALE: N/A
DWN		DATE		VIEW:
CHKD		DATE		UNIT: mm/in
APPD		DATE		SIZE: A4

XKB INDUSTRIAL PRECISION CO.,LIMITED

MODEL TYPE: 3.5 PHONE JACK

PART NO.:

DWG NO.: PJ-320AG-B

WEIGHT	SHEET	REVISION
1.0g	1/1	A0

单击下面可查看定价，库存，交付和生命周期等信息

>>XKB Connectivity(中国星坤)

Downloaded From Oneyac.com