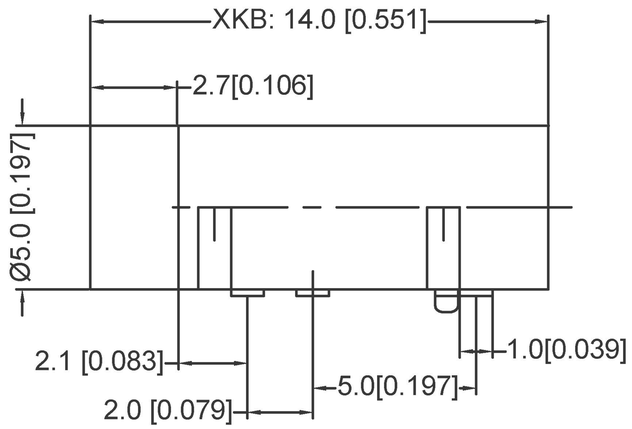

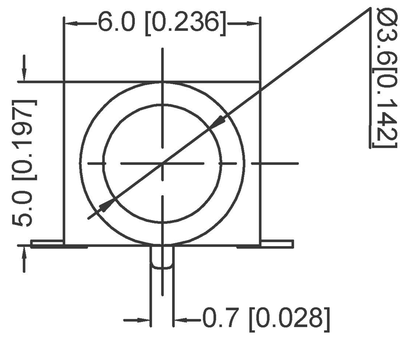

PCB LAYOUT TOP VIEW

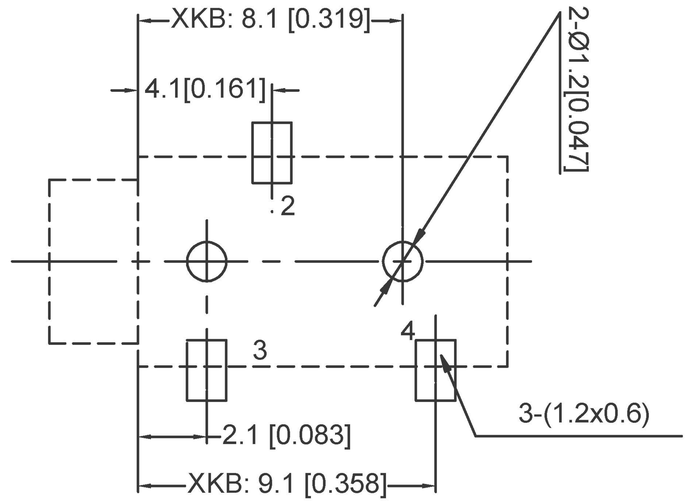

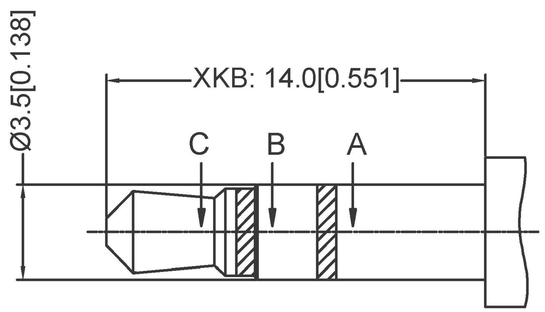

MATE PLUG

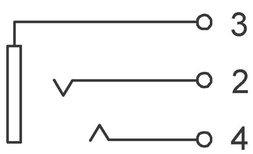

	MATERIAL	PLATING
terminal	copper alloY	silver
terminal	copper alloY	silver
terminal	copper alloY	silver
terminal	copper alloY	silver
terminal	brass	silver
terminal	brass	
plastic	PA9T	

广东星坤科技股份有限公司

生		日					
Δx 数		期					
Δx							
Δx							
MARK	DESCRIPTION	DATE	REVISED	APPROVED			

文 件 工 程 章

REVISIONS

www.xk-dg.cn www.helloxkb.com www.helloxkb.cn

ANGLAR	±5°	
X.X	±0.2mm	
X.XX	±0.1mm	
X.XXX	±0.05mm	

UNSPECIFIED TOLERANCES

DSND		DATE		SCALE: N/A
DWN		DATE		VIEW:
CHKD		DATE		UNIT: mm/in
APPD		DATE		SIZE: A4

XKB INDUSTRIAL PRECISION CO.,LIMITED

MODEL TYPE: 3.5 PHONE JACK

PART NO.:

DWG NO.: PJ-320B

WEIGHT	SHEET	REVISION
1.0g	1/1	A0

单击下面可查看定价，库存，交付和生命周期等信息

>>XKB Connectivity(中国星坤)

Downloaded From Oneyac.com