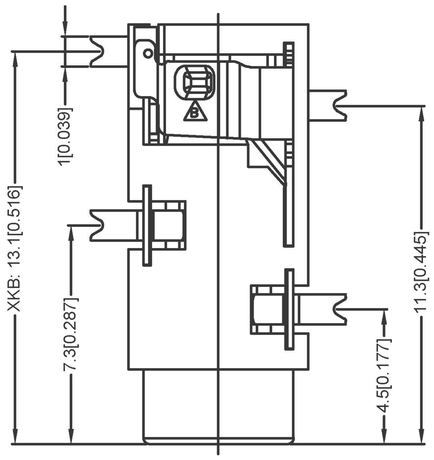

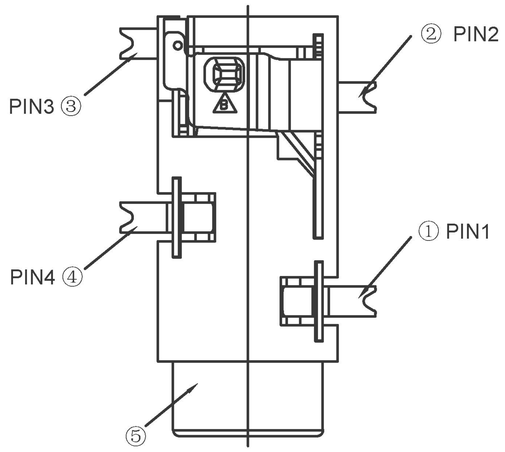

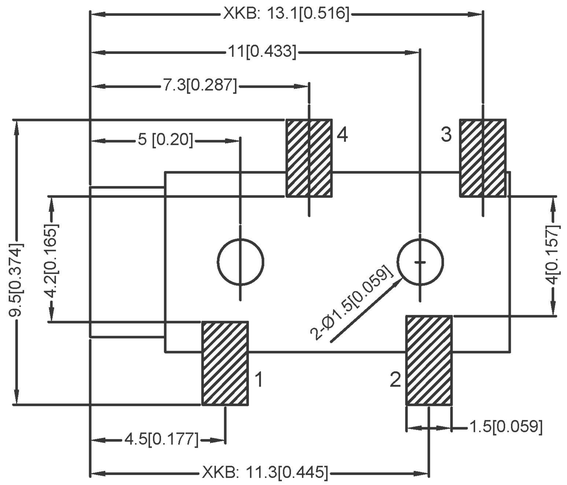

PCB LAYOUT TOP VIEW

TOLERANCES :±0.05

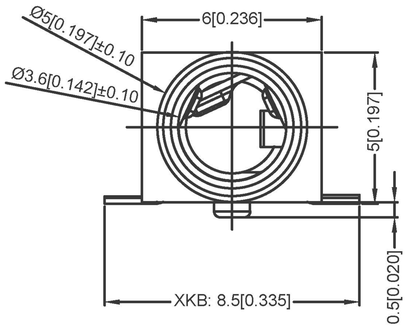

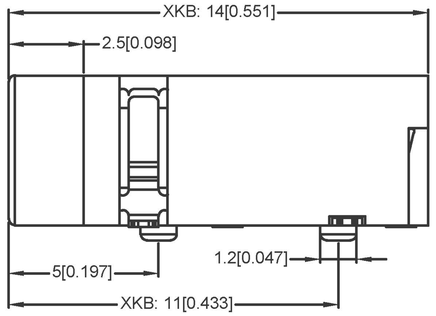

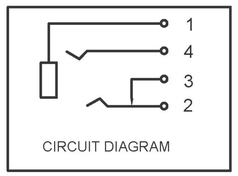

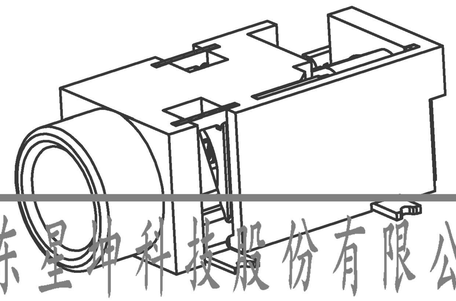

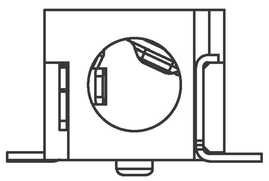

No.	PART NAME	QTY	MATERIAL(THICK)	PLATING(COLOR)
⑤	HOUSING	1	PA9T	SEE TABLE
④	TERMINAL 4#	1	PHOSPHOR BRONZE t=0.20	Ag-Plated
③	TERMINAL 3#	1	BRASS t=0.25	Ag-Plated
②	TERMINAL 2#	1	PHOSPHOR BRONZE t=0.25	Ag-Plated
①	TERMINAL 1#	1	PHOSPHOR BRONZE t=0.20	Ag-Plated

广东星坤科技股份有限公司
生效日期
文件工程章

MARK	DESCRIPTION	DATE	REVISED	APPROVED
ΔX				
ΔX				
ΔX				

REVISIONS

UNSPECIFIED TOLERANCES	
ANGLAR	±5°
X.X	±0.2mm
X.XX	±0.1mm
X.XXX	±0.05mm

DSND		DATE		SCALE: N/A
DWN		DATE		VIEW:
CHKD		DATE		UNIT: mm/in
APPD		DATE		SIZE: A4

MODEL TYPE: 3.5 PHONE JACK

PART NO.:

DWG NO.: PJ-35825

WEIGHT	SHEET	REVISION

XKB INDUSTRIAL PRECISION CO. LIMITED

单击下面可查看定价，库存，交付和生命周期等信息

>>XKB Connectivity(中国星坤)

Downloaded From Oneyac.com