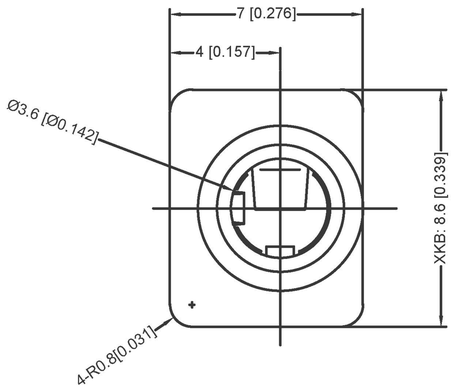

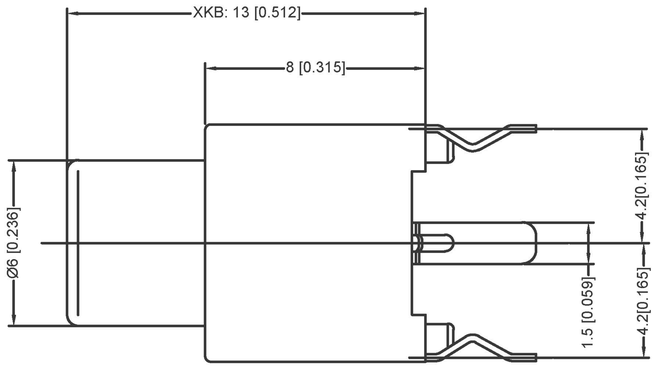

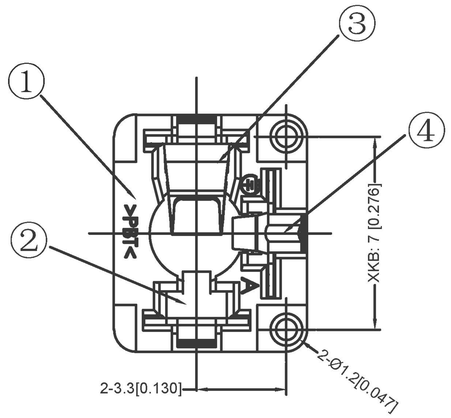

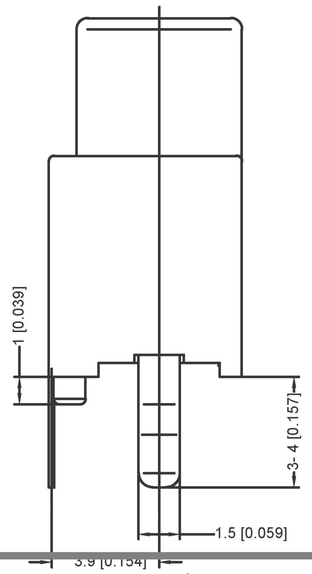

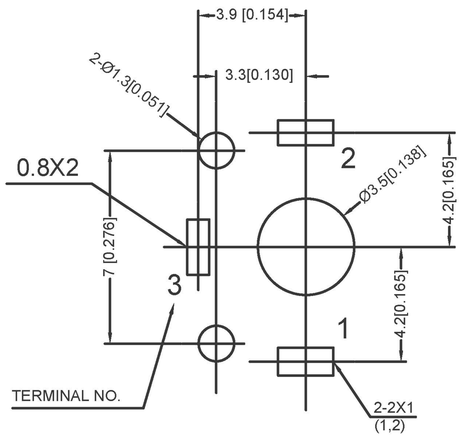

PCB HOLES(TOP VIEW) t=1.2/1.6mm
NOTE:GENERAL TOLERANCE:±0.1mm ⚠

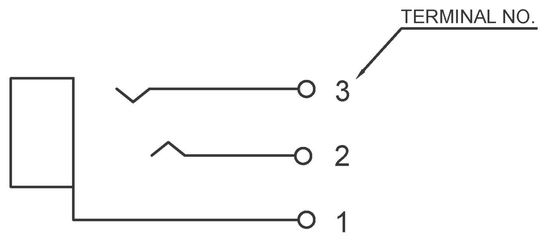

SCHEMATIC

	MATERIAL		PLATING
RING SPRING	PHOSPHOR BRONZE	t=0.2	Ag-PLATED
TIP SPRING	PHOSPHOR BRONZE	t=0.3	Ag-PLATED
SLEEVE SPRING	PHOSPHOR BRONZE	t=0.25	Ag-PLATED
HOUSING	PBT 94V-0		BLACK

广东星坤科技股份有限公司
生 日
ΔX 数 期
ΔX
ΔX
文 件 工 程 章

MARK	DESCRIPTION	DATE	REVISED	APPROVED

REVISIONS

ANGLAR	±5°	
X.X	±0.2mm	
X.XX	±0.1mm	
X.XXX	±0.05mm	

UNSPECIFIED TOLERANCES

www.xk-dg.cn www.helloxkb.com www.helloxkb.cn

DSND		DATE		SCALE: N/A
DWN		DATE		VIEW:
CHKD		DATE		UNIT: mm/in
APPD		DATE		SIZE: A4

XKB INDUSTRIAL PRECISION CO.,LIMITED

MODEL TYPE: 3.5 PHONE JACK
PART NO.:
DWG NO.: PJ-3584

WEIGHT	SHEET	REVISION
1.0g	1/1	A0

单击下面可查看定价，库存，交付和生命周期等信息

>>XKB Connectivity(中国星坤)

Downloaded From Oneyac.com