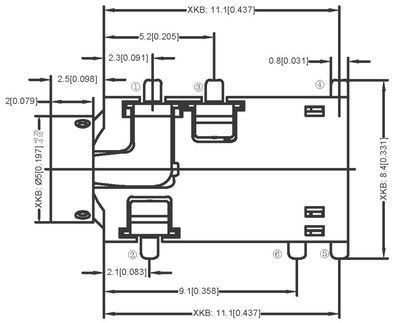


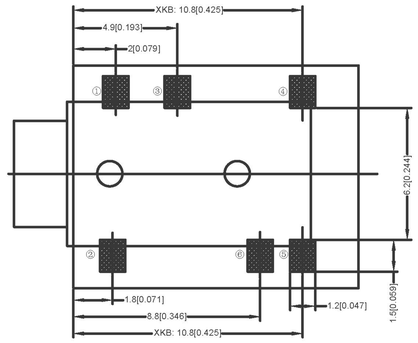


RECOMMENDED PCB LAYOUT

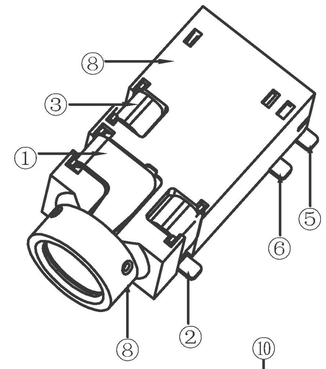

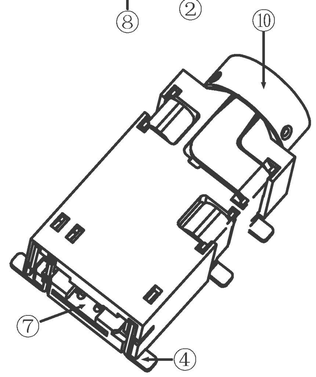

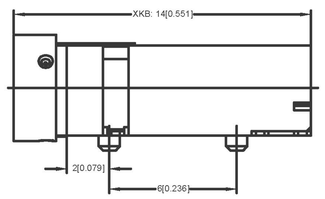


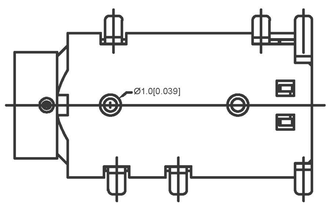


NOTES:
注释：
1.ELECTRICALCHARACTERS:
电气特性：
1.1 RATED VOLTAGE: 5 VDC
额定电压：5 VDC
1.2 RATED CURRENT: 0.5A MAX PER CONTACT AT 30° T-RISE
额定电流：0.5A MAX PER CONTACT AT 30° T-RISE
1.3 CONTACT RESISTANCE: 70 MILLIOHMS MAX.
接触电阻：70 MILLIOHMS MAX.
1.4 INSULATION RESISTANCE: 100 MEGAOHMS MIN
绝缘电阻：100 MEGAOHMS MIN
1.5 DIELECTIC WITHSTANDING VOLTAGE: 500V AC AT SEA LEVEL
绝缘耐受电压：500V AC AT SEA LEVEL
2.MECHANICAL CHARACTERISTICS:
机械特性：
2.1 INSERTION FORCE: 20N MAX.(INTIAL)
20N MAX.(AFTER 5000 CYCLES DURABILITY TEST
插入力：最大20N (初始)
最大20N（5000次循环耐久性试验后）
2.2 WITHDRWAL FORCE: 12±5N (INITIAL)
9±5N(AFTER 5000 CYCLES DURABILITY TEST)
牵引力：12±5N (初始)
9±5N (5000次循环耐久性试验后)
2.3 DURABILITY:5000 CYCLES
耐久性：5000次循环
3.ENVIRONMENTAL CHARACTERISTICS:
环境特征：
3.1 OPERATING TEMPERATURE: -30°TO+85°
工作温度：-30°至+85°
3.2 STORAGE TEMPERATURE: -40°TO+85°
贮存温度：-40°至+85°
4.PACKAGE: TAPE RELL
包装：胶带

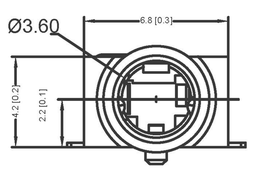


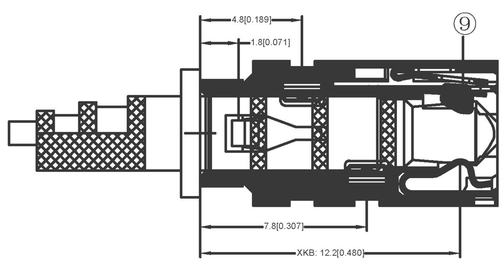


接触点示意图

SCHEMATIC (PLUG OUT)

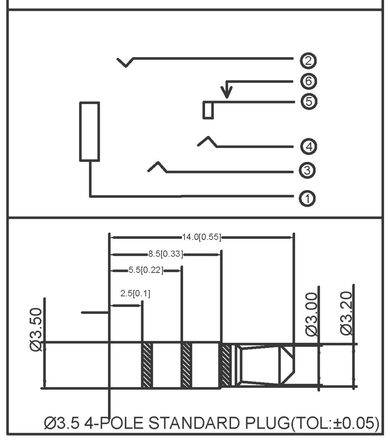


Ø3.5 4-POLE STANDARD PLUG(TOL:±0.05)

| | | MATERIAL | PLATING |
|---|---|---|---|
| 10 | RING | BRASS | |
| 9 | INSERT MOLDING 1 | PA9T | BLACK |
| 8 | HOUSING 1 | PA9T | BLACK |
| 7 | 7# CONTACT FOOT 1 | STAINLESS STEEL PLATE | |
| 6 | 6# CONTACT FOOT 1 | COPPER ALLOY | Au-Plating |
| 5 | 5# CONTACT FOOT 1 | COPPER ALLOY | Au-Plating |
| 4 | 4# CONTACT FOOT 1 | COPPER ALLOY | Au-Plating |
| 3 | 3# CONTACT FOOT 1 | COPPER ALLOY | Au-Plating |
| 2 | 2# CONTACT FOOT 1 | COPPER ALLOY | Au-Plating |
| 1 | 1# CONTACT FOOT 1 | COPPER ALLOY | Au-Plating |

广东星坤科技股份有限公司
生效日期
文件工程章

| MARK | DESCRIPTION | DATE | REVISED | APPROVED |
|---|---|---|---|---|
| ΔX | | | | |
| ΔX | | | | |
| ΔX | | | | |

REVISIONS

| UNSPECIFIED TOLERANCES | |
|---|---|
| ANGLAR | ±5° |
| X.X | ±0.2mm |
| X.XX | ±0.1mm |
| X.XXX | ±0.05mm |

www.xk-dg.cn www.helloxkb.com www.helloxkb.cn

| | | | | |
|---|---|---|---|---|
| DSND | | DATE | | SCALE: N/A |
| DWN | | DATE | | VIEW: |
| CHKD | | DATE | | UNIT: mm/in |
| APPD | | DATE | | SIZE: A4 |

XKB INDUSTRIAL PRECISION CO.,LIMITED

MODEL TYPE: 3.5 PHONE JACK
PART NO.:
DWG NO.: PJ-3701-SMT

| WEIGHT | SHEET | REVISION |
|---|---|---|
| 1.0g | 1/1 | A0 |

单击下面可查看定价，库存，交付和生命周期等信息

>>XKB Connectivity(中国星坤)

Downloaded From Oneyac.com