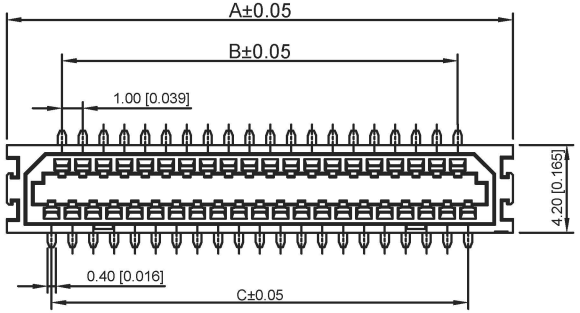

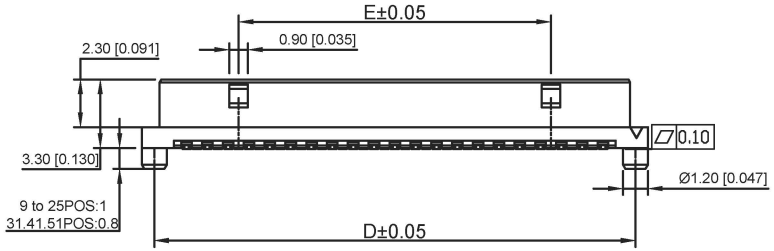

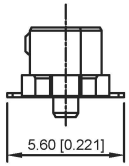

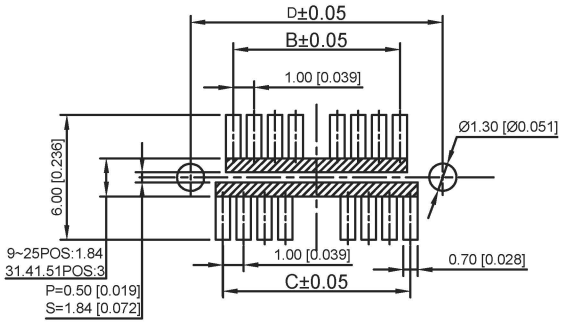

RECOMMENDED PCB LAYOUT(TOP VIEW)

Note 1: ▨ If the pattern is included in the shaded area and not treated with resist, it could touch the connector contact.
Note 2 : Please refer to each product size pattern for the universal size on the above patterns(A，B，C，D...).

■ Specifications :

- Voltage rating: 150V AC / DC
- Current rating: 0.5A AC / DC
- Withstanding voltage: 250V AC/minute
- Temperature range: -45°C~+125°C
- Insulation resistance:≥500MΩ
- Contact resistance: ≤50mΩ
- After environmental testing：≤60mΩ
- Max.Processing Temp:230℃ for 30-60 seconds
- (260℃ for 10 seconds)

X1016 W M-XX B XX SN XX
① ②③④ ⑤ ⑥ ⑦ ⑧

① Series No.
② Category： W-wafer
③ Welding Board Angle: M-Male
④ Row No.-Pin No.: XX-21P,31P,41P,51P
⑤ B-Positioning column without positioning plate
⑥ Material： 46-PA46 94V-0 ; 6T -PA6T 94V-0 ;
⑦ Planting Category: SN-Bright tin plating ;
⑧ Color：Blank-natural color

NO.OF Contacts	A	B	C	D	E
9 PIN	8.3000	3	4	7.1000	0
11 PIN	9.3000	4	5	8.1000	0
13 PIN	10.3000	5	6	9.1000	0
15 PIN	11.3000	6	7	10.1000	0
17 PIN	12.3000	7	8	11.1000	0
19 PIN	13.3000	8	9	12.1000	0
21 PIN	14.3000	9	10	13.1000	5
23 PIN	15.3000	10	11	14.1000	6
25 PIN	16.3000	11	12	15.1000	7
31 PIN	19.3000	14	15	18.1000	10
41 PIN	24.3000	19	20	23.1000	15
51 PIN	29.3000	24	25	28.1000	20

X1016WM-XXB-46SN	Nylon 46 UL 94V-0	Phosphor Bronze	Tin-Plated	Brass	Tin-Plated
X1016WM-XXB-6TSN	Nylon 6T UL 94V-0				
PART N0	Material	Material(Pin)	Finish(Pin)	Material (Solder Tab)	Finish (Solder Tab)

广东星坤科技股份有限公司
生效日期
文件工程章

MARK	DESCRIPTION	DATE	REVISED	APPROVED

REVISIONS

UNSPECIFIED TOLERANCES	
ANGLAR	±5°
L≤4	±0.2
4<L≤16	±0.3
16<L≤63	±0.4
L>63	±0.5

DSND		DATE		SCALE: N/A	MODEL TYPE: X1016WM-XXB-XXSN
DWN		DATE		VIEW:	PART NO.: 1.00 mm Crimp Style Connectors
CHKD		DATE		UNIT: mm/in	DWG NO.:
APPD		DATE		SIZE: A4	

XKB INDUSTRIAL PRECISION CO.,LIMITED

WEIGHT	SHEET	REVISION
1.0g	1/1	A0

Downloaded From Oneyac.com

单击下面可查看定价，库存，交付和生命周期等信息

>>XKB Connectivity(中国星坤)

Downloaded From Oneyac.com