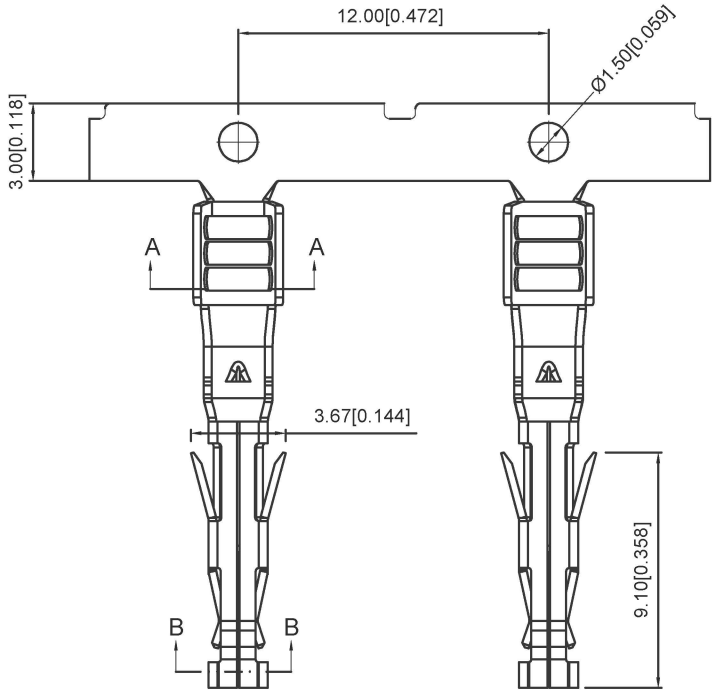

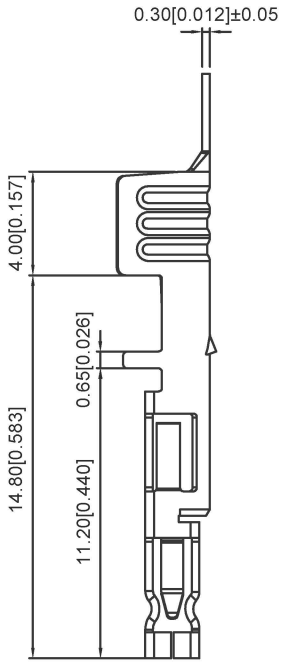

Specifications:

Voltage rating: 600V AC / DC
Current rating: Table
Withstanding voltage: 2200V AC/minute
Temperature range: -40°C~+105°C
Insulation resistance: ≥1000M Ω
Contact resistance: ≤5mΩ
After environmental testing : ≤10mΩ
Material : High conductive Brass
Wire Range:AWG#14-16
Insulation O.D.: 1.85mm(Max)
Plating method : Blank-Stamping before plating

X5700 T- PSN -L
① ② ③ ④ ⑤

① Series Number
② Category: T-terminal
③ Material: P-Phosphir bronze
④ Plating style:
SN-Bright tin plating 100u" Min Sn,Ni 50u"Min
⑤ Mold No./Mark/Special No.
L- Low foot (applicable to 14#/16 #)

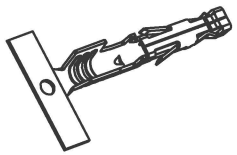

Current rating				
Ckt. Size / AWG &Metric wire size	2	4	6	8~12
14 AWG,2.5mm²	19 A	15 A	13 A	11 A
16 AWG,1.5mm²	15 A	13 A	11 A	10 A

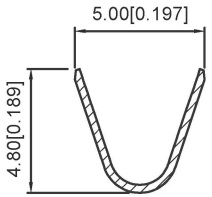

SECTION A-A
SCALE 1:1
CONDUCTOR CRIMP 12 AWG

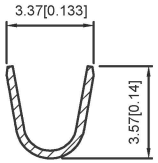

SECTION A-A
SCALE 1:1
CONDUCTOR CRIMP 14/16 AWG

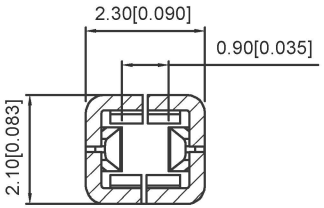

SECTION B-B
SCALE 2:1

X5700T-PSN-L	High conductive Brass	X5700H	X5700W
PART N0	Material	Suitable XKB Terminal	Suitable XKB Terminal

广东星坤科技股份有限公司
生效日期
文件工程章

MARK	DESCRIPTION	DATE	REVISED	APPROVED
ΔX				
ΔX				
ΔX				

REVISIONS

units: mm
tolerance:
X.X ±0.2mm
X.XX ±0.1mm
X.XXX ±0.05mm
UNSPECIFIED TOLERANCES

www.xk-dg.cn www.helloxkb.com www.helloxkb.cn

DSND		DATE		SCALE: N/A	MODEL TYPE: Wire to board connector
DWN		DATE		VIEW:	PART NO.:
CHKD		DATE		UNIT: mm/in	DWG NO.: X5700T-XX-X
APPD		DATE		SIZE: A4	

XKB INDUSTRIAL PRECISION CO.,LIMITED

WEIGHT	SHEET	REVISION
1.0g	1/1	A0

Downloaded From Oneyac.com

单击下面可查看定价，库存，交付和生命周期等信息

>>XKB Connectivity(中国星坤)

Downloaded From Oneyac.com