REV.	ECN NO OR DESCRIPTION	REVISED	DATE
A	PDR NO.:T101008-6A	FW	2011.01.06
B	ECN NO.:S120771	SpringWang	2012.07.31
C	ECN NO.:S120720	ANDY	2013.04.01

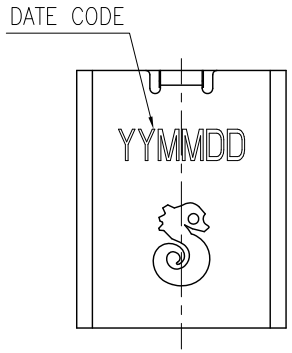

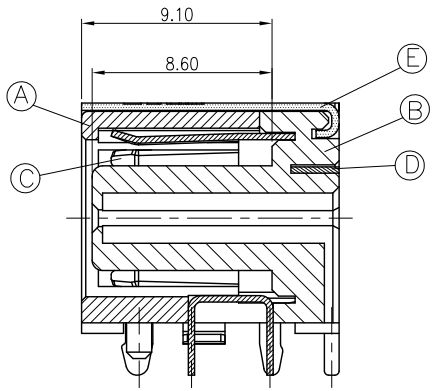

SECTION A-A
SCALE 1:1

SCHEMATIC

#1 SPRING(+)

#2 SPRING(-)

NOTE:
1. SEE 2DC1003 SERIES SPECIFICATION.
2. PACKAGING: TAPE & REEL
3. TO CONFORM TO SINGATRON HAZARDOUS SUBSTANCE FREE SPEC.
4. HALOGEN FREE PRODUCT IDENTIFICATION MARK ON JACK:◎
5. HALOGEN FREE PRODUCT IDENTIFICATION LABEL ON PACKAGING:
6. FOR REFLOW SOLDERING LEAD-FREE PROCESS.
7. PRINTED DATE CODE"YYMMDD" ON TOP OF CONNECTOR.

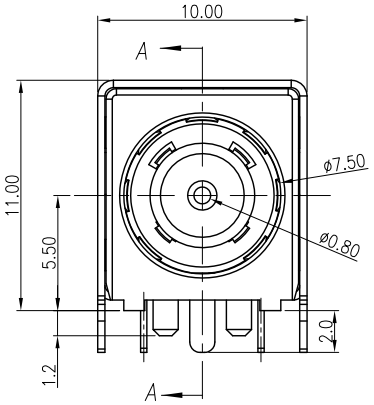

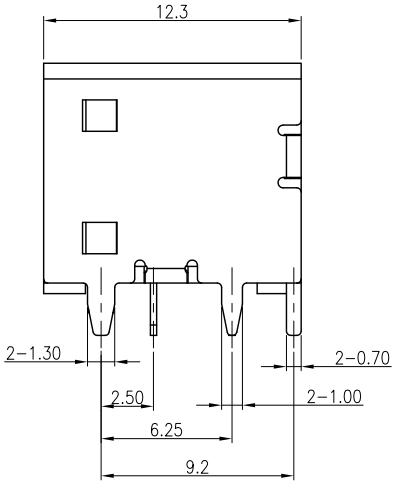

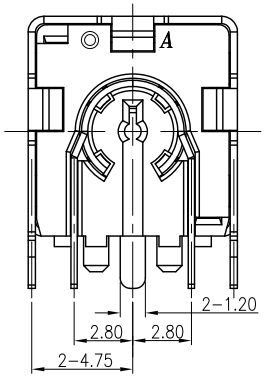

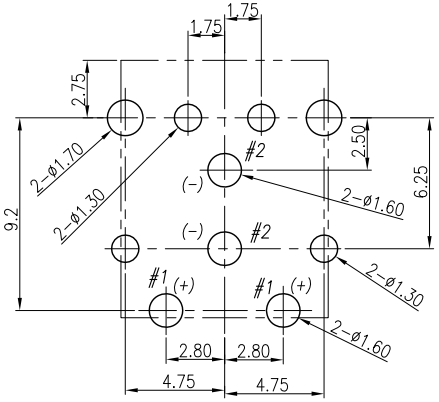

RECOMMENDED P.C.B LAYOUT (t=1.6mm)
TOP VIEW (Tolerance:±0.05)

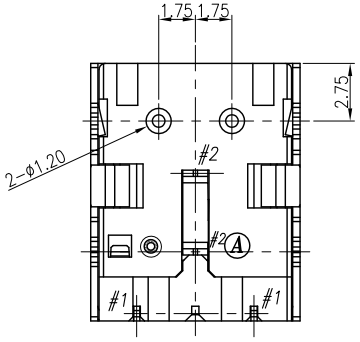

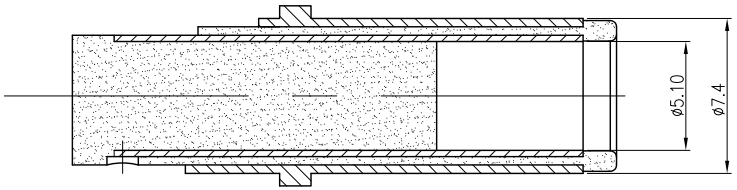

MATING PLUG: OD ø7.4 ;
Tolerance:±0.05

NO.	DESCRIPTION	QTY	MATERIAL	PLATING & COLOR
E	SHELL	1	BRASS 0.35t	NICKEL(60u"Min.) PLATING
D	SPRING (+)	1	COPPER ALLOY 0.3t	GOLD FLASH(1~3u") PLATING
C	SPRING (-)	1	COPPER ALLOY 0.3t	GOLD FLASH(1~3u") PLATING
B	COVER	1	HIGH TEMP. THERMOPLASTIC UL 94V-0	BLACK COLOR
A	HOUSING	1	HIGH TEMP. THERMOPLASTIC UL 94V-0	BLACK COLOR

UNLESS OTHERWISE SPECIFED TOLERANCES

DECIMALS: X :±0.5, X.X :±0.3, X.XX :±0.2

ANGLES: X :±2°, X.X :±1°

Singatron Enterprise Co., Ltd.
信音企業股份有限公司

TITLE	DC POWER JACK			
DWN	ANDY	PART NO.2DC1003-000211F		
CHKD	TOM	SCALE: 4:1	UNIT: mm	
APVD	MAX	SIZE: A3	SHEET: 1 OF1	REV:C

CUSTOMER COPY

文件編號 RD-06-043-A

Downloaded From Oneyac.com

单击下面可查看定价，库存，交付和生命周期等信息

>>信音

Downloaded From Oneyac.com