THIS DRAWING IS UNPUBLISHED. RELEASED FOR PUBLICATION
© COPYRIGHT copyright_date BY - ALL RIGHTS RESERVED.

LOC	DIST
A1	-

REVISIONS

F	LTR	DESCRIPTION	DATE	DWN	APVD
	B6	ECR-15-077291	02DEC2015	JJH	JP
	B7	SERRATION VIEWS ARE ADDED	19MAY2017	JJH	JP
	B8	ADDED REFERENCE TO SMBT CRIMP HEIGHT	12JAN2018	JP	JP
	B9	REFER PCN :E-20-014110	05OCT2020	SCK	JC

SECTION A-A
Schnitt A-A

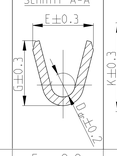

SECTION B-B
Schnitt B-B

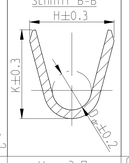

WIRE CRIMP
Drahtcrimp

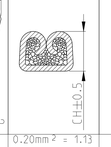

-	-	-	-	-	-	-	-	VERSION A	0.2 - 0.5 FLK	E = 2.2 G = 2.2 D_P = 0.8	H = 3.7 K = 3.8 D_P = 2.0	0.20mm² = 1.13 0.25mm² = 1.15 0.35mm² = 1.19 0.50mm² = 1.26	MQC- Applicator 878426-2	539635-1 WITH DIE: mit Matrize 539744-2	2.5	3.8	6.6	19.5	0.3	△8		
-	-	-	-	-	-	-													
-	-	-	-	-	-	-	-												
-	-	927839-2	C	-	-	CuSn4	vorverzinnt PRETINNED												
-	-	927839-1	C	-	-	CuFe2													
-	-	-	-	927827-2	C	CuSn4	vorverzinnt PRETINNED		0.5 - 1.0 FLK	E = 2.8 G = 3.0 D_P = 1.1	H = 4.5 K = 4.7 D_P = 2.4	0.5mm² = 1.38 0.75mm² = 1.47 1.0mm² = 1.56	MQC- Applicator 2-541689-2	539733-2 WITH DIE: mit Matrize 734249-0	3	4.2	5.8	19.5	0.4			
-	-	-	-	927827-1	C	CuFe2													
-	-	-	-	927833-5	D	CuFe2	△2		>1.0 - 2.5 FLK	E = 3.8 G = 4.1 D_P = 1.6	H = 5.7 K = 5.8 D_P = 3.6	1.5mm² = 1.76 2.0mm² = 1.90 2.5mm² = 2.04	MQC- Applicator 878367-2	539635-1 WITH DIE: mit Matrize 539733-2	3.5	4.7	6.3	19.5	0.4			
-	-	-	-	927833-2	D	CuSn4	vorverzinnt PRETINNED												
-	-	-	-	927833-1	D	CuFe2													
927824-2	C	-	-	-	-	CuSn4	vorverzinnt PRETINNED		>2.5 - 4.0 FLK	E = 4.6 G = 4.8 D_P = 2.4	H = 6.3 K = 6.6 D_P = 4.0	3.0mm² = 2.13 3.5mm² = 2.24 4.0mm² = 2.35	MQC- Applicator 2-878314-2	539635-1 WITH DIE: mit Matrize 539734-2	4	5.2	6.8	19.5	0.6			
927824-1	C	-	-	-	-	CuFe2													
△13 963709-5	C	-	-	-	-	CuFe2	vorversilbert PRESILVERED △2		4.0 - 6.0 FLK	E = 5.2 G = 5.5 D_P = 2.9	H = 7.3 K = 7.6 D_P = 4.5	4.0mm² = 2.17 5.0mm² = 2.36 6.0mm² = 2.55	MQC- Applicator 2-878738-2	-	4.2	5.6	7.7	20 20.4	0.6			
-	-	-	-	-	-	-	-												
-	-	-	-	-	-	-	-												
△13 963709-2	C	-	-	-	-	CuSn4	vorverzinnt PRETINNED												
△13 963709-1	C	-	-	-	-	CuFe2													
-	-	-	-	-	-	-	-												
1241818-5	B	-	-	-	-	CuFe2	△2		0.2 - 0.5 FLR	E = 2.2 G = 2.2 D_P = 0.8	H = 2.8 K = 2.8 D_P = 1.4	0.2mm² = 1.13 0.35mm² = 1.19 0.5mm² = 1.26	MQC- Applicator 878427-2	-	2.5	3.8	⟨B9⟩ 6.6	19.5	0.3	△8		
1241818-1	B	-	-	-	-	CuFe2	vorverzinnt PRETINNED												
-	-	927840-5	C	-	-	CuFe2	vorversilbert PRESILVERED △2												
-	-	927840-4	C	-	-	CuSn4													
-	-	-	-	-	-	-	-												
-	-	927840-2	C	-	-	CuSn4	vorverzinnt PRETINNED		0.5 - 1.0 FLR	E = 2.8 G = 3.0 D_P = 1.1	H = 3.9 K = 4.1 D_P = 1.8	0.5mm² = 1.43 0.75mm² = 1.52 1.0mm² = 1.61	MQC- Applicator 878328-2	169400-0 WITH DIE: mit Matrize 734781-1	3	4.2	5.8	19.5	0.4			
-	-	927840-1	C	-	-	CuFe2													
-	-	-	-	1-927831-5	C	CuFe2	△1												
-	-	-	-	927831-5	C	CuFe2	vorversilbert PRESILVERED △2												
-	-	-	-	927831-4	C	CuSn4													
-	-	-	-	-	-	-	-												
-	-	-	-	927831-2	C	CuSn4	vorverzinnt PRETINNED		>1.0 - 2.5 FLR	E = 3.8 G = 4.1 D_P = 1.6	H = 4.8 K = 4.9 D_P = 2.6	1.25mm² = 1.69 1.5mm² = 1.76 2.0mm² = 1.90 2.5mm² = 2.04	MQC- Applicator 878356-2	169400-0 WITH DIE: mit Matrize 734251-0	3.5	4.7	6.3	19.5	0.4			
-	-	-	-	927831-1	C	CuFe2													
-	-	-	-	1-927837-5	D	CuFe2	△1												
-	-	-	-	927837-6	D	CuFe2	△6												
-	-	-	-	927837-5	D	CuFe2	vorversilbert PRESILVERED △2												
-	-	-	-	927837-4	D	CuSn4													
-	-	-	-	-	-	-	-												
-	-	-	-	927837-2	D	CuSn4	vorverzinnt PRETINNED		>2.5 - 4.0 FLR	E = 4.6 G = 4.8 D_P = 2.4	H = 5.5 K = 5.7 D_P = 3.3	3.0mm² = 2.13 3.5mm² = 2.24 4.0mm² = 2.35	MQC- Applicator 2-878384-2	169400-0 WITH DIE: mit Matrize 734251-0	4	5.2	6.8	19.5	0.6			
-	-	-	-	927837-1	D	CuFe2													
1-927829-5	D	-	-	-	-	CuFe2	△1												
927829-5	D	-	-	-	-	CuFe2	△2												
927829-2	D	-	-	-	-	CuSn4	vorverzinnt PRETINNED												
927829-1	D	-	-	-	-	CuFe2													

-	-	-	-	2-927836-2	C	CuSn4	△5	VERSION B	0.5 - 1.0 FLR	E = 2.8 G = 3.0 D_P = 1.1	H = 7.6 K = 7.7 D_P = 5.6	0.5mm² = 1.43 0.75mm² = 1.52 1.0mm² = 1.61	MQC- Applicator 878337-2	539635-1 WITH DIE: mit Matrize 739736-2	3	5.4	7.2	20	1.25	963243-1 963244-1	100132-1
-	-	-	-	-	-	-	-															
-	-	-	-	927836-2	C	CuSn4	vorverzinnt PRETINNED															
-	-	-	-	927836-1	C	CuFe2																
-	-	-	-	2-927835-2	C	CuSn4	△5		>1.0 - 2.5 FLR	E = 3.8 G = 4.1 D_P = 1.6	H = 7.6 K = 7.7 D_P = 5.6	1.5mm² = 1.76 2.0mm² = 1.90 2.5mm² = 2.04	MQC- Applicator 878338-2	539635-1 WITH DIE: mit Matrize 539736-2	3.5	5.9	7.7	20	1.25	963244-1 963245-1	100132-1
-	-	-	-	2-927835-1	C	CuSn4	△6															
-	-	-	-	1-927835-3	C	CuFe2	△6															
-	-	-	-	-	-	-	-															
-	-	-	-	927835-2	C	CuSn4	vorverzinnt PRETINNED		>2.5 - 4.0 FLR	E = 4.6 G = 4.8 D_P = 2.4	H = 7.6 K = 7.7 D_P = 5.6	3.0mm² = 2.13 - 4.0mm² = 2.35	MQC- Applicator 878441-2	539635-1 WITH DIE: mit Matrize 539736-2	4	5.9	7.7	20	1.25	963245-1	100132-1
-	-	-	-	927835-1	C	CuFe2																
2-928966-2	D	-	-	-	-	CuSn4	△5															
2-928966-1	D	-	-	-	-	CuSn4	△6															
1-928966-3	D	-	-	-	-	CuFe2	△6															
-	-	-	-	-	-	-	-															
928966-2	D	-	-	-	-	CuSn4	vorverzinnt PRETINNED		>3.0 - 5.0 FLR	E = 4.8 G = 5.2 D_P = 2.5	H = 8.15 K = 7.8 D_P = 6.0	3.0mm² = 2.25 4.0mm² = 2.50 5.0mm² = 2.75	MQC- Applicator -	WITH DIE: mit Matrize -	4	5.9	7.7	20	1.25	967011-1 963245-1	100132-1
928966-1	D	-	-	-	-	CuFe2																
1241962-1	B	-	-	-	-	CuFe2	vorverzinnt PRETINNED															
TE Connectivity ORDER - NO STRIP FORM Bandware (SERRATION DESIGN - 1)	REV	TE Connectivity ORDER - NO STRIP FORM Bandware (SERRATION DESIGN - 2)	REV	TE Connectivity ORDER - NO STRIP FORM Bandware (SERRATION DESIGN - 3)	REV	MATERIAL Werkstoff	SURFACE Oberflaeche		DGB WIRE RANGE (mm²)	WIRE CRIMP Drahtcrimp STRIP FORM / Bandware CRIMP DIMENSIONS (mm) Crimpabmessungen (mm)	INSUL-CRIMP Isol - crimp	CRIMP HEIGHT Crimp-Hoehe	APPLICATION TOOL Anschlag-WKZ EXTRACTION TOOL Ausdrueckwerkzeug Nr.:726503-1	HAND TOOL Handzange	A	B	C	D	E	SINGLE WIRE SEAL Einzeldichtung TE CONNECTIVITY ORDER - No.	DEAD END PLUG Blindstopfen	△7

VERSION A
(UNSEALED/ ungedichtet)

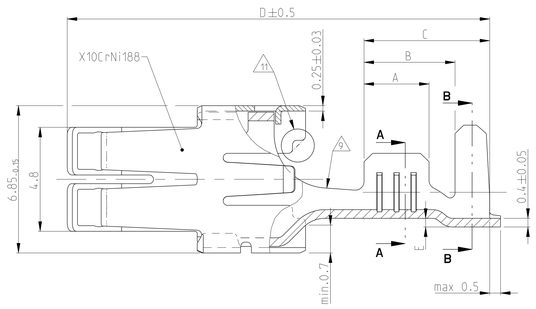

SERRATION DESIGN - 1

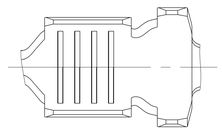

SERRATION DESIGN - 3

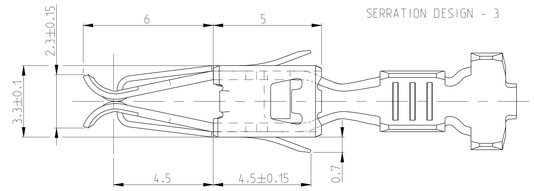

SERRATION DESIGN - 2

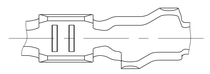

VERSION B
(SINGLE WIRE SEAL/
Einzel-Dichtungs-System)

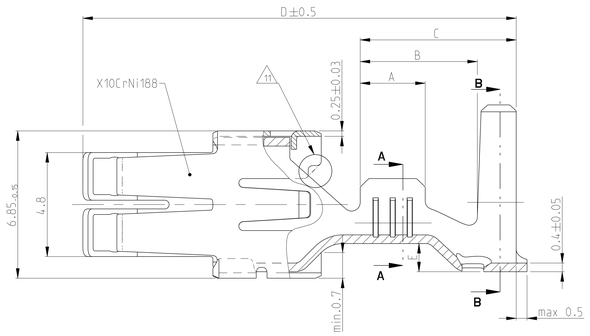

SERRATION DESIGN - 3

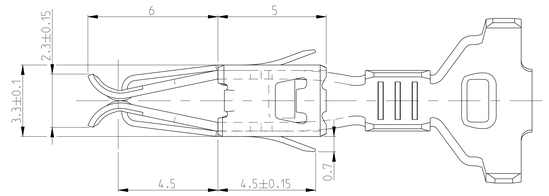

SERRATION DESIGN - 1

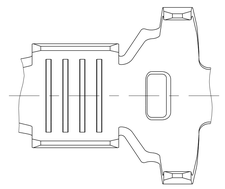

△1 CONTACT ZONE SELECTIVE
PRE SILVER PLATED MIN 3-4.5 µm
Kontaktzone selektiv
vorversilbert min. 3-4.5 µm

△2 CONTACT ZONE SELECTIVE
PRE SILVER PLATED MIN 1-1.5 µm
Kontaktzone selektiv
vorversilbert min. 1-1.5 µm

△3 CONTACT BODY: ELECTRO TIN PLATED OVER NICKEL
CONTACT AREA: GOLD PLATED
Kontaktkoerper: gal. verzinnt ueber Nickel
Kontaktzone: vergoldet

△4 CONTACT BODY: ELECTRO TIN PLATED OVER NICKEL
CONTACT AREA: SELECTIVE NICKEL PLATED 2-4 µm
Kontaktkoerper: gal. verzinnt ueber Nickel
Kontaktzone: selektiv vernickelt 2-4 µm

△5 CONTACT BODY: ELECTRO TIN PLATED OVER NICKEL
TOUCHING AREA TO CANTILEVER SPRING:
SELECTIVE AU PLATED OVER NICKEL
CANTILEVER SPRING: COMPLETELY AU PLATED
Kontaktkoerper: gal. verzinnt ueber Nickel
Anlageflaeche zur Ueberfeder
selektiv Au ueber Ni beschichtet
Ueberfeder: komplett Au beschichet

△6 CONTACT BODY: ELECTRO TIN PLATED OVER NICKEL
TOUCHING AREA TO CANTILEVER SPRING AND CONTACT AREA
SELECTIVE AU PLATED OVER NICKEL
CANTILEVER SPRING: COMPLETELY AU PLATED
Kontaktkoerper: gal. verzinnt ueber Nickel
Anlageflaeche zur Ueberfeder Kontaktzone
selektiv Au ueber Ni beschichtet
Ueberfeder: komplett Au beschichet

△7 PREFORMT ISO-AREA
ONLY FOR PN: 1241962-1
Isoflanken vorgeformt
nur bei PN:1241962-1

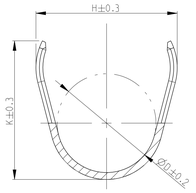

SECTION B-B
Schnitt B-B

△8 WRAP CRIMP
ONLY FOR PN:927839.927840
928989 AND 928990
Umfassungscrimp
nur bei PN: 927839.927840.928989 und 928990

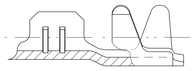

△9 TRANSITION ONLY FOR PN 927827.927828.927829.
927830.927833.927834.927837.AND 927838
Uebergang nur fuer PN 927827.927828.927829.
927830.927833.927834.927837.und 927838

△10 1-3 µm Sn28M LAYER FOR HIGHER
TEMPERATURE REQUIREMENTS
1-3 µm Sn28M Schicht fuer hoehere
Temperaturanforderungen

△11 DOTTED LINE IS ALTERNATIVE SHAPE
Gestrichelte Linie alternative Form

△12 OBSOLETE

⟨B8⟩ △13 SEE APPLICATION SPEC. FOR PREFERRED STANDARD TO MEET NEW REQUIREMENT
@LV214-2 SLOW MOTION BENDING TEST
Siehe Verarbeitungs Spezifikation fuer bevorzugten Standard um den neuen
Anforderungen der LV214-2 Slow Motion Pruefung zu genuegen

THIS DRAWING IS A CONTROLLED DOCUMENT.

DIMENSIONS: mm

TOLERANCES UNLESS OTHERWISE SPECIFIED: .X ±0.2mm .XX ±0.05mm .XXX ±0.025mm ANGLES ± 2°

MATERIAL - FINISH -

EXTRACTION TOOL 1-1579007-6 968107-1

DWN	M.PFEILSCHIFTER	06APR2011
CHK	V.HUHN	17MAY2000
APVD	M.BLEICHER	17MAY2000
PRODUCT SPEC	108-18025	
APPLICATION SPEC	114-18037	
WEIGHT	-	

TE Connectivity

NAME: STANDARD POWER TIMER CONTACT
Standard Power Timer Kontakt

SIZE	CASE CODE	DRAWING NO	RESTRICTED TO
A0	00779	C-1355048	-

CUSTOMER DRAWING | SCALE 10:1 | SHEET 1 OF 1 | REV B9

4806 (3/11)
Downloaded From Oneyac.com

ONEYAC 唯样商城 | 电子元器件线上授权代理开拓者
原厂授权 · 正品现货 · 一件即发

单击下面可查看定价，库存，交付和生命周期等信息

>>TE Connectivity(泰科)

Downloaded From Oneyac.com