CJ78 Series Three Terminal Voltage Regulators

1 Introduction

The CJ78 series is a group of three terminal positive voltage linear regulators with multiple fixed output voltages. Under the condition of good heat dissipation, it can provide output current up to 1.5A, and has the functions of internal current limit, short circuit protection, thermal shutdown protection and output transistor SOA protection, which make it relatively difficult to damage. Although designed as fixed voltage regulators without external components, these devices can be used with external components to obtain adjustable voltage and current. Therefore, the CJ78 series is widely used as fixed voltage regulators, including local (on card) regulators, to eliminate noise and power distribution problems associated with single point regulation.

2 Applications

- AC Inventors
- DC Motor Drivers
- Household Electric Appliances
- HVAC Systems
- Industrial Power Supplies
- SMPS Post Regulation
- Solar Energy String Inventors
- Test and Measurement Equipment

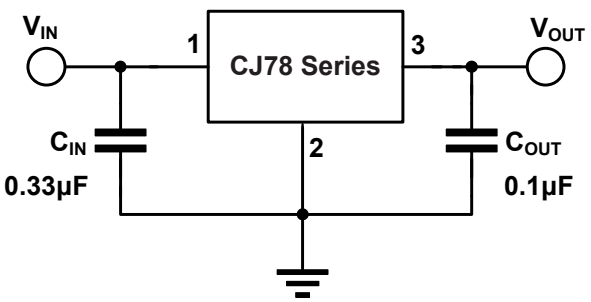

Figure 2-1. Fixed Output Voltage Regulator

3 Features

- Output Current:
  up to 1.5A at T_J = 25°C
- Available in Fixed 5.0V, 6.0V, 8.0V, 9.0V and 12V
- Output Voltage Tolerance:
  ±3% at T_J = 25°C
  ±5% over the Operating T_J
- Line Regulation:
  4.0 ~ 12mV (Typ.) at T_J = 25°C
- Load Regulation:
  9.0 ~ 14mV (Typ.) at T_J = 25°C
- Dropout Voltage:
  2V@1A (V_{OUT} = 5.0V)
- Power Supply Rejection Ratio:
  >55dB@120Hz (V_{OUT} = 5.0V)
- Operating Junction Temperature:
  -40 ~ 125°C
- Internal Current Limit
- Output Transistor SOA Protection
- Short Circuit Protection
- Thermal Shutdown Protection

4 Available Packages

PART NUMBER	PACKAGE
CJ78 Series	TO-251-3L
	TO-251S
	TO-220-3L
	TO-220F
	TO-252-2L
	TO-263-2L

Note: For all available packages, please refer to the part *Orderable Information*.

Downloaded From Oneyac.com

5 Orderable Information

MODEL	DEVICE	PACKAGE	OP T_J	ECO PLAN	MSL	PACKING OPTION	SORT
CJ78-5.0	CJ7805	TO-220-3L	-40 ~ 125°C	RoHS & Green	N / A for Pkg Type	Tube 50 Units / Rail	Active
	CJ7805	TO-220-3L	-40 ~ 125°C	RoHS & non Green	N / A for Pkg Type	Tube 50 Units / Rail	NoRD
CJ78-6.0	CJ7806	TO-220-3L	-40 ~ 125°C	RoHS & Green	N / A for Pkg Type	Tube 50 Units / Rail	Active
	CJ7806	TO-220-3L	-40 ~ 125°C	RoHS & non Green	N / A for Pkg Type	Tube 50 Units / Rail	NoRD
CJ78-8.0	CJ7808	TO-220-3L	-40 ~ 125°C	RoHS & Green	N / A for Pkg Type	Tube 50 Units / Rail	Active
	CJ7808	TO-220-3L	-40 ~ 125°C	RoHS & non Green	N / A for Pkg Type	Tube 50 Units / Rail	NoRD
CJ78-9.0	CJ7809	TO-220-3L	-40 ~ 125°C	RoHS & Green	N / A for Pkg Type	Tube 50 Units / Rail	Active
	CJ7809	TO-220-3L	-40 ~ 125°C	RoHS & non Green	N / A for Pkg Type	Tube 50 Units / Rail	NoRD
CJ78-12	CJ7812	TO-220-3L	-40 ~ 125°C	RoHS & Green	N / A for Pkg Type	Tube 50 Units / Rail	Active
	CJ7812	TO-220-3L	-40 ~ 125°C	RoHS & non Green	N / A for Pkg Type	Tube 50 Units / Rail	NoRD
CJ78-5.0	CJ7805F	TO-220F	-40 ~ 125°C	RoHS & Green	N / A for Pkg Type	Tube 50 Units / Rail	Active
	CJ7805F	TO-220F	-40 ~ 125°C	RoHS & non Green	N / A for Pkg Type	Tube 50 Units / Rail	NoRD
CJ78-9.0	CJ7809F	TO-220F	-40 ~ 125°C	RoHS & Green	N / A for Pkg Type	Tube 50 Units / Rail	Active
	CJ7809F	TO-220F	-40 ~ 125°C	RoHS & non Green	N / A for Pkg Type	Tube 50 Units / Rail	NoRD
CJ78-12	CJ7812F	TO-220F	-40 ~ 125°C	RoHS & Green	N / A for Pkg Type	Tube 50 Units / Rail	Active
	CJ7812F	TO-220F	-40 ~ 125°C	RoHS & non Green	N / A for Pkg Type	Tube 50 Units / Rail	NoRD

Downloaded From Oneyac.com

5 Orderable Information

MODEL	DEVICE	PACKAGE	OP T_J	ECO PLAN	MSL	PACKING OPTION	SORT
CJ78-12	CJ7812	TO-251-3L	-40 ~ 125°C	RoHS & Green	Level 3 168 HR	Tube 80 Units / Rail	Active
	CJ7812	TO-251S	-40 ~ 125°C	RoHS & Green	Level 3 168 HR	Tube 80 Units / Rail	NoRD
CJ78-5.0	CJ7805	TO-252-2L	-40 ~ 125°C	RoHS & Green	Level 3 168 HR	Tape and Reel 2500 Units / Reel	Active
	CJ7805	TO-252-2L	-40 ~ 125°C	RoHS & non Green	Level 3 168 HR	Tape and Reel 2500 Units / Reel	NoRD
CJ78-6.0	CJ7806	TO-252-2L	-40 ~ 125°C	RoHS & Green	Level 3 168 HR	Tape and Reel 2500 Units / Reel	Active
	CJ7806	TO-252-2L	-40 ~ 125°C	RoHS & non Green	Level 3 168 HR	Tape and Reel 2500 Units / Reel	NoRD
CJ78-8.0	CJ7808	TO-252-2L	-40 ~ 125°C	RoHS & Green	Level 3 168 HR	Tape and Reel 2500 Units / Reel	Active
	CJ7808	TO-252-2L	-40 ~ 125°C	RoHS & non Green	Level 3 168 HR	Tape and Reel 2500 Units / Reel	NoRD
CJ78-9.0	CJ7809	TO-252-2L	-40 ~ 125°C	RoHS & Green	Level 3 168 HR	Tape and Reel 2500 Units / Reel	Active
	CJ7809	TO-252-2L	-40 ~ 125°C	RoHS & non Green	Level 3 168 HR	Tape and Reel 2500 Units / Reel	NoRD
CJ78-12	CJ7812	TO-252-2L	-40 ~ 125°C	RoHS & Green	Level 3 168 HR	Tape and Reel 2500 Units / Reel	Active
	CJ7812	TO-252-2L	-40 ~ 125°C	RoHS & non Green	Level 3 168 HR	Tape and Reel 2500 Units / Reel	NoRD

Downloaded From Oneyac.com

5 Orderable Information

MODEL	DEVICE	PACKAGE	OP T_J	ECO PLAN	MSL	PACKING OPTION	SORT
CJ78-5.0	CJ7805	TO-263-2L	-40 ~ 125°C	RoHS & Green	N / A for Pkg Type	Tape and Reel 800 Units / Reel	Active
	CJ7805	TO-263-2L	-40 ~ 125°C	RoHS & non Green	N / A for Pkg Type	Tape and Reel 800 Units / Reel	NoRD
CJ78-6.0	CJ7806	TO-263-2L	-40 ~ 125°C	RoHS & Green	N / A for Pkg Type	Tape and Reel 800 Units / Reel	Active
	CJ7806	TO-263-2L	-40 ~ 125°C	RoHS & non Green	N / A for Pkg Type	Tape and Reel 800 Units / Reel	NoRD
CJ78-8.0	CJ7808	TO-263-2L	-40 ~ 125°C	RoHS & Green	N / A for Pkg Type	Tape and Reel 800 Units / Reel	Active
	CJ7808	TO-263-2L	-40 ~ 125°C	RoHS & non Green	N / A for Pkg Type	Tape and Reel 800 Units / Reel	NoRD
CJ78-9.0	CJ7809	TO-263-2L	-40 ~ 125°C	RoHS & Green	N / A for Pkg Type	Tape and Reel 800 Units / Reel	Active
	CJ7809	TO-263-2L	-40 ~ 125°C	RoHS & non Green	N / A for Pkg Type	Tape and Reel 800 Units / Reel	NoRD
CJ78-12	CJ7812	TO-263-2L	-40 ~ 125°C	RoHS & Green	N / A for Pkg Type	Tape and Reel 800 Units / Reel	Active
	CJ7812	TO-263-2L	-40 ~ 125°C	RoHS & non Green	N / A for Pkg Type	Tape and Reel 800 Units / Reel	NoRD
Others	-	-	-	-	-	-	Customized

Note:

ECO PLAN: For the RoHS and Green certification standards of this product, please refer to the official report provided by JSCJ.

MSL: Moisture Sensitivity Level. Determined according to JEDEC industry standard classification.

SORT: Specifically defined as follows:

Active: Recommended for new products;

Customized: Products manufactured to meet the specific needs of customers;

Preview: The device has been released and has not been fully mass produced. The sample may or may not be available;

NoRD: It is not recommended to use the device for new design. The device is only produced for the needs of existing customers;

Obsolete: The device has been discontinued.

Downloaded From Oneyac.com

6 Pin Configuration and Marking Information

6.1 Pin Configuration and Function

Figure 6-1. CJ78 Series Package Top View

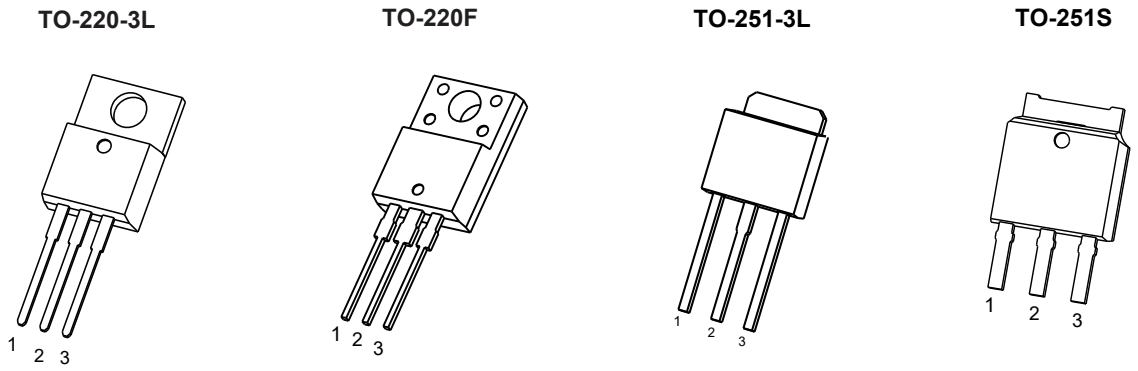

PIN NAME	CJ78 Series Package				I / O	DESCRIPTION
	TO-220-3L	TO-220F	TO-251-3L	TO-251S		
IN	1	1	1	1	I	Input to the device.
GND	2	2	2	2	-	Regulator ground.
OUT	3	3	3	3	O	Output of the regulator.

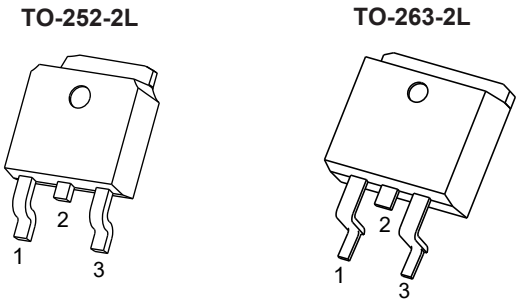

PIN NAME	CJ78 Series Package		I / O	DESCRIPTION
	TO-252-2L	TO-263-2L		
IN	1	1	I	Input to the device.
GND	2	2	-	Regulator ground.
OUT	3	3	O	Output of the regulator.

Downloaded From Oneyac.com

6 Pin Configuration and Marking Information

6.2 Marking Information

Figure 6-2. CJ78 Series Marking Information

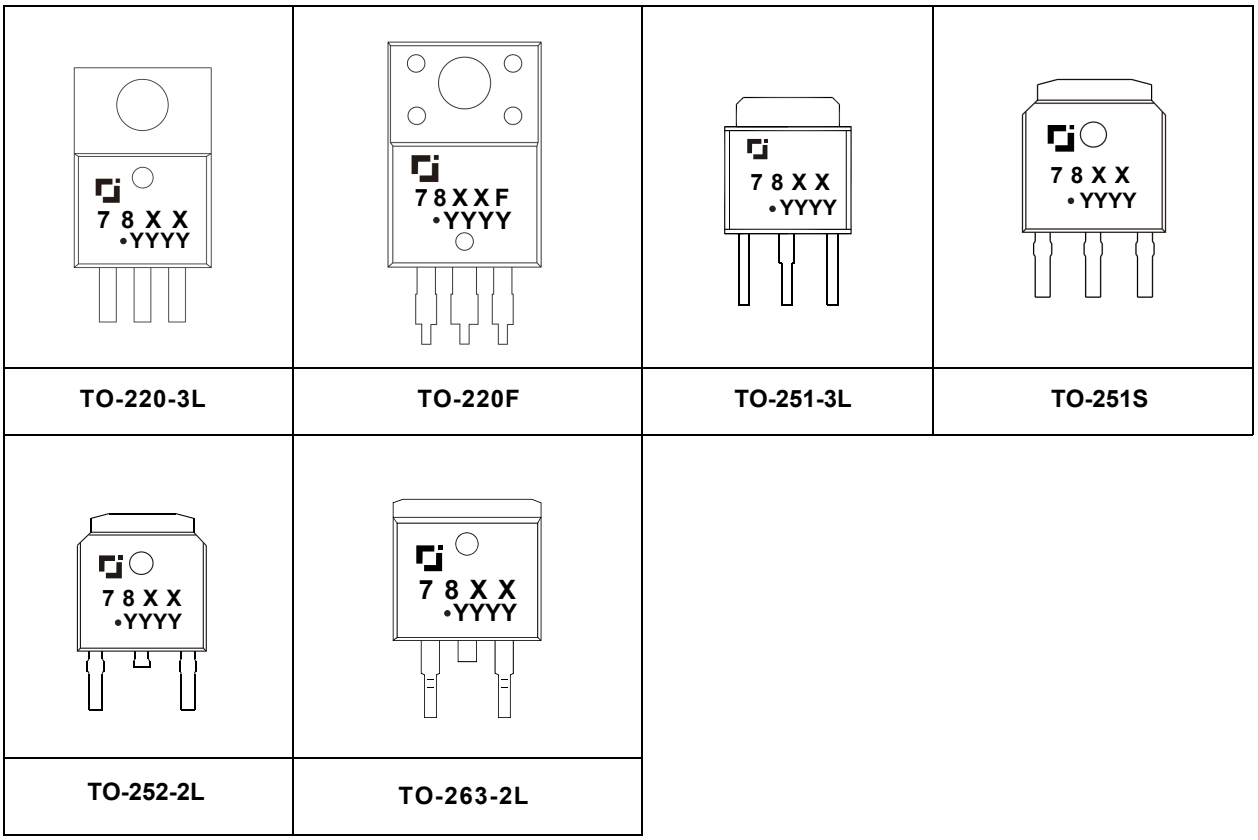

"78XX" or "78XXF": Device code, the "XX" in the "78XX" or "78XXF" represents the output voltage, for example, if V_{OUT} = 5.0V, the "XX" is "05".

"•" Solid Dot: Green molding compound device. If none, the normal device.

"YYYY": Code. Indicates weekly record information of production.

Downloaded From Oneyac.com

7 Specifications

7.1 Absolute Maximum Ratings

(over operating free-air temperature range, unless otherwise specified)

CHARACTERISTIC			SYMBOL	VALUE	UNIT
Maximum input voltage(2)			V_{IN}	35	V
Maximum power dissipation	CJ78 Series	TO-251-3L	$P_{D\ Max}$	Internally Limited(3)	W
		TO-251S			
		TO-220-3L			
		TO-220F			
		TO-252-2L			
		TO-263-2L			
Maximum junction temperature			$T_{J\ Max}$	150	°C
Storage temperature			T_{stg}	-65 ~ 150	°C
Soldering temperature & time			T_{solder}	260°C, 10s	-

(1) Stresses beyond those listed under *Absolute Maximum Ratings* may cause permanent damage to the device. These are stress ratings only, which do not imply functional operation of the device at these or any other conditions beyond those indicated under *Recommended Operating Conditions*. Exposure to absolute-maximum rated conditions for extended periods may affect device reliability.
(2) All voltages are with respect to network ground terminal.
(3) Refer to *Thermal Information* for details.

7.2 Recommended Operating Conditions

PARAMETER	SYMBOL	MIN.	NOM.	MAX.	UNIT
Operating junction temperature	T_J	-40	-	125	°C
Operating ambient temperature	T_A	-	-(4)	-	°C

(4) It is necessary to ensure that the operating junction temperature of the device does not exceed the rated value of the recommended operating conditions when using the device for design.

7.3 ESD Ratings

ESD RATINGS		SYMBOL	VALUE	UNIT
Electrostatic discharge(5)	Human body model	$V_{ESD\text{-}HBM}$	1000	V
	Machine model	$V_{ESD\text{-}MM}$	200	

(5) ESD testing is conducted in accordance with the relevant specifications formulated by the Joint Electronic Equipment Engineering Commission (JEDEC). The human body model (HBM) electrostatic discharge test is based on the JESD22-114D test standard, using a 100pF capacitor and discharging to each pin of the device through a resistance of 1.5kΩ. The electrostatic discharge test in mechanical model (MM) is based on the JESD22-115-A test standard and uses a 200pF capacitor to discharge directly to each pin of the device.

Downloaded From Oneyac.com

7 Specifications

7.4 Thermal Information

THERMAL METRIC[6]	SYMBOL	CJ78 Series			UNIT
Junction-to-ambient thermal resistance	$R_{\Theta JA}$	**TO-220-3L**	**TO-220F**	**TO-251-3L**	°C/W
		64.3	66.7	80.1	
		TO-251S	**TO-252-2L**	**TO-263-2L**	
		81.2	78.2	60.5	
Junction-to-case thermal resistance	$R_{\Theta JC}$	**TO-220-3L**	**TO-220F**	**TO-251-3L**	°C/W
		5.5	6.0	9.1	
		TO-251S	**TO-252-2L**	**TO-263-2L**	
		9.4	5.4	5.0	
Reference maximum power dissipation for continuous operation	$P_{D\ Ref}$	**TO-220-3L**	**TO-220F**	**TO-251-3L**	W
		1.53	1.51	1.25	
		TO-251S	**TO-252-2L**	**TO-263-2L**	
		1.23	1.25	1.60	

(6) T_A = 25°C, all numbers are typical, and apply for packages soldered directly onto a PCB board in still air without extra heat dissipation pads.

Downloaded From Oneyac.com

7 Specifications

7.5 Electrical Characteristics

CJ7805 (V_{IN} = 10V, I_{OUT} = 500mA, C_{IN} = 0.33μF, C_{OUT} = 0.1μF, T_J = 25°C, unless otherwise specified)

CHARACTERISTIC	SYMBOL	TEST CONDITIONS	MIN.	TYP.(7)	MAX.	UNIT
Output voltage	V_{OUT}	T_J = 25°C	4.85	5.00	5.15	V
		I_{OUT} = 5mA to 1A, V_{IN} = 7 to 20V, T_J = 0 to 125°C	4.75	5.00	5.25	
Line regulation	ΔV_{OUT}	V_{IN} = 7 to 25V	-	4	100	mV
		V_{IN} = 8 to 12V	-	1.6	50	
Load regulation	ΔV_{OUT}	I_{OUT} = 5mA to 1.5A	-	9	100	mV
		I_{OUT} = 250 to 750mA	-	4	50	
Quiescent current	I_Q	T_J = 25°C	-	5	8	mA
Quiescent current change	ΔI_Q	I_{OUT} = 5mA to 1A	-	0.03	0.5	mA
		V_{IN} = 7 to 25V	-	0.3	1.3	
Output voltage drift	$\Delta V_{OUT}/\Delta T$	I_{OUT} = 5mA	-	-1.1	-	mV/°C
Output noise voltage	V_N	f = 10 to 100k Hz	-	42	-	μV
Ripple rejection	RR	f = 120Hz, V_{IN} = 8 to 18V	62	73	-	dB
Dropout voltage(8)	V_D	I_{OUT} = 1A	-	2	-	V
Output resistance	R_{OUT}	f = 1kHz	-	10	-	mΩ
Short circuit current	I_{SC}	-		230	-	mA
Peak current	I_{PK}	-	-	2.2	-	A

Note:

(7) Pulse test technology is used to make T_J as close to T_A as possible. Thermal effects must be considered separately. Typical numbers are at 25°C and represent the most likely norm.

(8) The difference of output voltage and input voltage when input voltage is decreased gradually till output voltage equals to 95% of V_{OUT}.

Downloaded From Oneyac.com

7 Specifications

7.5 Electrical Characteristics (continued)

CJ7806 (V_{IN} = 11V, I_{OUT} = 500mA, C_{IN} = 0.33μF, C_{OUT} = 0.1μF, T_J = 25°C, unless otherwise specified)

CHARACTERISTIC	SYMBOL	TEST CONDITIONS	MIN.	TYP.(7)	MAX.	UNIT
Output voltage	V_{OUT}	T_J = 25°C	5.82	6.00	6.18	V
		I_{OUT} = 5mA to 1A, V_{IN} = 8 to 21V, T_J = 0 to 125°C	5.70	6.00	6.30	
Line regulation	ΔV_{OUT}	V_{IN} = 8 to 25V	-	5	120	mV
		V_{IN} = 9 to 13V	-	1.5	60	
Load regulation	ΔV_{OUT}	I_{OUT} = 5mA to 1.5A	-	14	120	mV
		I_{OUT} = 250 to 750mA	-	4	60	
Quiescent current	I_Q	-	-	4.3	8	mA
Quiescent current change	ΔI_Q	I_{OUT} = 5mA to 1A	-	-	0.5	mA
		V_{IN} = 8 to 25V	-	-	1.3	
Output voltage drift	$\Delta V_{OUT}/\Delta T$	I_{OUT} = 5mA	-	-0.8	-	mV/°C
Output noise voltage	V_N	f = 10 to 100k Hz	-	45	-	μV
Ripple rejection	RR	f = 120Hz, V_{IN} = 9 to 19V	59	75	-	dB
Dropout voltage(8)	V_D	I_{OUT} = 1A	-	2	-	V
Output resistance	R_{OUT}	f = 1kHz	-	10	-	mΩ
Short circuit current	I_{SC}	-	-	550	-	mA
Peak current	I_{PK}	-	-	2.1	-	A

Note:

(7) Pulse test technology is used to make T_J as close to T_A as possible. Thermal effects must be considered separately. Typical numbers are at 25°C and represent the most likely norm.

(8) The difference of output voltage and input voltage when input voltage is decreased gradually till output voltage equals to 95% of V_{OUT}.

Downloaded From Oneyac.com

7 Specifications

7.5 Electrical Characteristics (continued)

CJ7808 (V_{IN} = 14V, I_{OUT} = 500mA, C_{IN} = 0.33μF, C_{OUT} = 0.1μF, T_J = 25°C, unless otherwise specified)

CHARACTERISTIC	SYMBOL	TEST CONDITIONS	MIN.	TYP.(7)	MAX.	UNIT
Output voltage	V_{OUT}	T_J = 25°C	7.76	8.00	8.24	V
		I_{OUT} = 5mA to 1A, V_{IN} = 10.5 to 23V, T_J = 0°C to 125°C	7.60	8.00	8.40	
Line regulation	ΔV_{OUT}	V_{IN} = 10.5 to 25V	-	6	160	mV
		V_{IN} = 11 to 17V	-	2	80	
Load regulation	ΔV_{OUT}	I_{OUT} = 5mA to 1.5A	-	12	160	mV
		I_{OUT} = 250 to 750mA	-	4	80	
Quiescent current	I_Q	-	-	4.3	8	mA
Quiescent current change	ΔI_Q	I_{OUT} = 5mA to 1A	-	-	0.5	mA
		V_{IN} = 10.5 to 25V	-	-	1.0	
Output voltage drift	$\Delta V_{OUT}/\Delta T$	I_{OUT} = 5mA	-	-0.8	-	mV/°C
Output noise voltage	V_N	f = 10 to 100k Hz	-	52	-	μV
Ripple rejection	RR	f = 120Hz, V_{IN} = 11.5 to 21.5V	55	72	-	dB
Dropout voltage(8)	V_D	I_{OUT} = 1A	-	2	-	V
Output resistance	R_{OUT}	f = 1kHz	-	10	-	mΩ
Short circuit current	I_{SC}	-		450	-	mA
Peak current	I_{PK}	-	-	2.2	-	A

Note:

(7) Pulse test technology is used to make T_J as close to T_A as possible. Thermal effects must be considered separately. Typical numbers are at 25°C and represent the most likely norm.

(8) The difference of output voltage and input voltage when input voltage is decreased gradually till output voltage equals to 95% of V_{OUT}.

Downloaded From Oneyac.com

7 Specifications

7.5 Electrical Characteristics (continued)

CJ7809 (V_{IN} = 16V, I_{OUT} = 500mA, C_{IN} = 0.33μF, C_{OUT} = 0.1μF, T_J = 25°C, unless otherwise specified)

CHARACTERISTIC	SYMBOL	TEST CONDITIONS	MIN.	TYP.(7)	MAX.	UNIT
Output voltage	V_{OUT}	T_J = 25°C	8.73	9.00	9.27	V
		I_{OUT} = 5mA to 1A, V_{IN} = 11.5 to 24V, T_J = 0°C to 125°C	8.55	9.00	9.45	
Line regulation	ΔV_{OUT}	V_{IN} = 11.5 to 27V	-	7	180	mV
		V_{IN} = 13 to 19V	-	2	90	
Load regulation	ΔV_{OUT}	I_{OUT} = 5mA to 1.5A	-	12	180	mV
		I_{OUT} = 250 to 750mA	-	4	90	
Quiescent current	I_Q	-	-	4.3	8	mA
Quiescent current change	ΔI_Q	I_{OUT} = 5mA to 1A	-	-	0.5	mA
		V_{IN} = 11.5 to 27V	-	-	1.0	
Output voltage drift	$\Delta V_{OUT}/\Delta T$	I_{OUT} = 5mA	-	-1	-	mV/°C
Output noise voltage	V_N	f = 10 to 100k Hz	-	60	-	μV
Ripple rejection	RR	f = 120Hz, V_{IN} = 12 to 22V	55	70	-	dB
Dropout voltage(8)	V_D	I_{OUT} = 1A	-	2	-	V
Output resistance	R_{OUT}	f = 1kHz	-	18	-	mΩ
Short circuit current	I_{SC}	-		400	-	mA
Peak current	I_{PK}	-	-	2.2	-	A

Note:

(7) Pulse test technology is used to make T_J as close to T_A as possible. Thermal effects must be considered separately. Typical numbers are at 25°C and represent the most likely norm.

(8) The difference of output voltage and input voltage when input voltage is decreased gradually till output voltage equals to 95% of V_{OUT}.

Downloaded From Oneyac.com

7 Specifications

7.5 Electrical Characteristics (continued)

CJ7812 (V_{IN} = 19V, I_{OUT} = 500mA, C_{IN} = 0.33μF, C_{OUT} = 0.1μF, T_J = 25°C, unless otherwise specified)

CHARACTERISTIC	SYMBOL	TEST CONDITIONS	MIN.	TYP.(7)	MAX.	UNIT
Output voltage	V_{OUT}	T_J = 25°C	11.64	12.00	12.36	V
		I_{OUT} = 5mA to 1A, V_{IN} = 14.5V to 27V, T_J = 0°C to 125°C	11.40	12.00	12.60	
Line regulation	ΔV_{OUT}	V_{IN} = 14.5 to 30V	-	12	240	mV
		V_{IN} = 16 to 22V	-	4	120	
Load regulation	ΔV_{OUT}	I_{OUT} = 5mA to 1.5A	-	10	240	mV
		I_{OUT} = 250 to 750mA	-	3	120	
Quiescent current	I_Q	-	-	4.3	8	mA
Quiescent current change	ΔI_Q	I_{OUT} = 5mA to 1A	-	-	0.5	mA
		V_{IN} = 14.5 to 30V	-	-	1.0	
Output voltage drift	$\Delta V_{OUT}/\Delta T$	I_{OUT} = 5mA	-	-1	-	mV/°C
Output noise voltage	V_N	f = 10 to 100k Hz	-	75	-	μV
Ripple rejection	RR	f = 120Hz, V_{IN} = 15 to 25V	55	71	-	dB
Dropout voltage(8)	V_D	I_{OUT} = 1A	-	2	-	V
Output resistance	R_{OUT}	f = 1kHz	-	18	-	mΩ
Short circuit current	I_{SC}	-		350	-	mA
Peak current	I_{PK}	-	-	2.2	-	A

Note:

(7) Pulse test technology is used to make T_J as close to T_A as possible. Thermal effects must be considered separately. Typical numbers are at 25°C and represent the most likely norm.

(8) The difference of output voltage and input voltage when input voltage is decreased gradually till output voltage equals to 95% of V_{OUT}.

Downloaded From Oneyac.com

7 Specifications

7.6 Typical Characteristics

CJ7805 (V_{OUT} = 5.0V, C_{IN} = 0.33μF, C_{OUT} = 0.1μF, T_J = 25°C, unless otherwise specified)

Output Characteristics

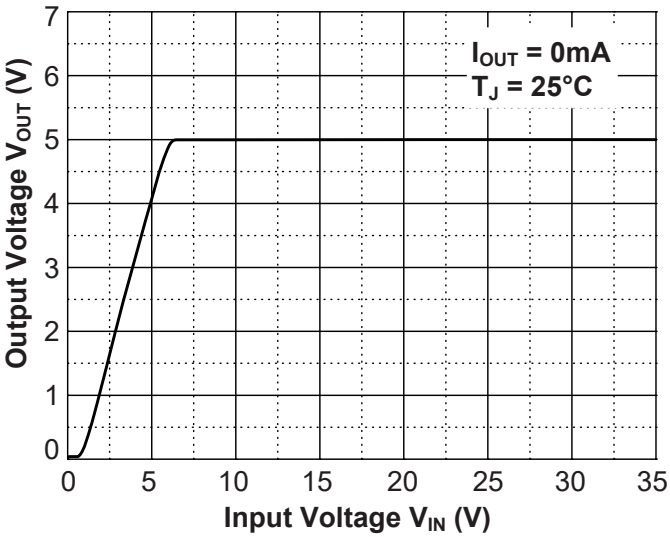

Dropout Characteristics

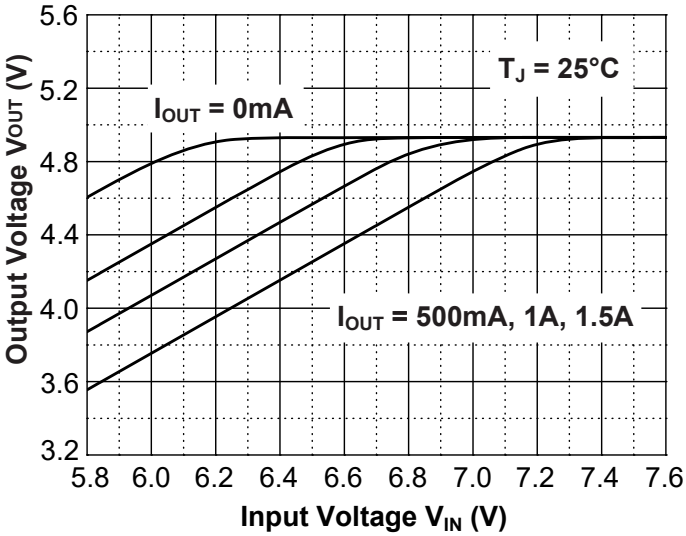

Quiescent Current

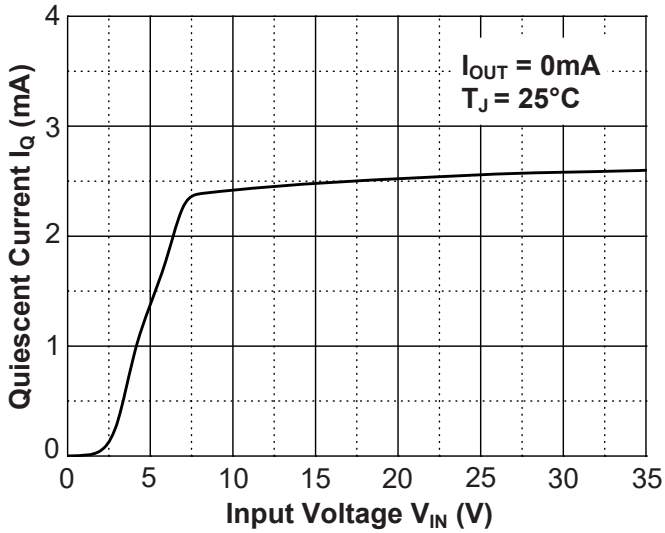

Current Cut-off Grid Voltage

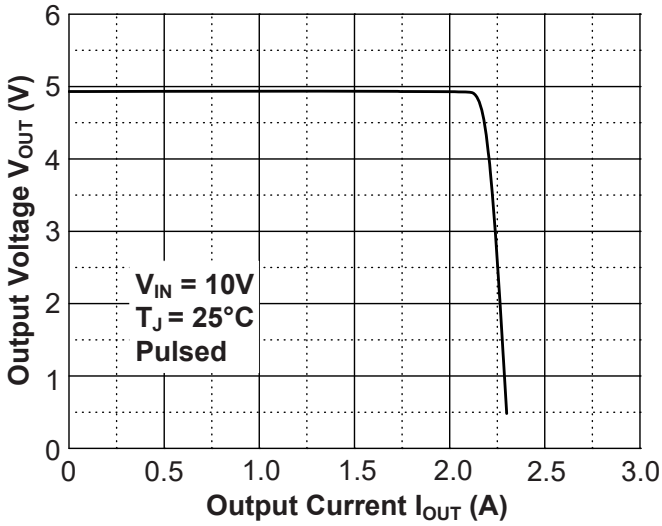

Output Voltage vs. Junction Temperature

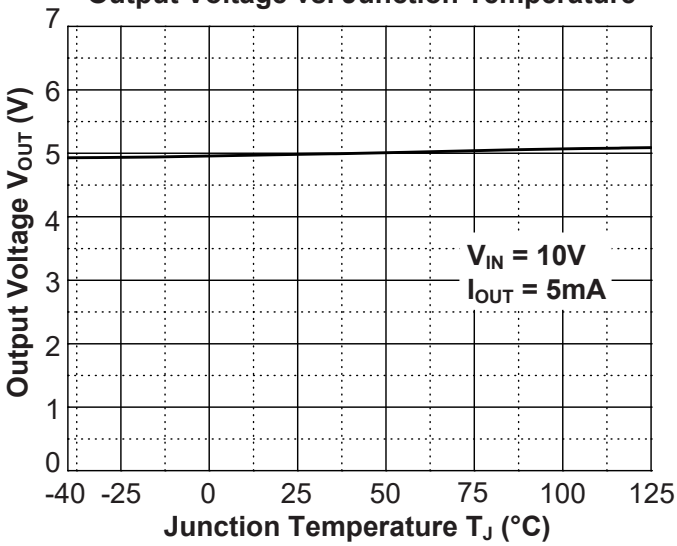

Power Derating Curve

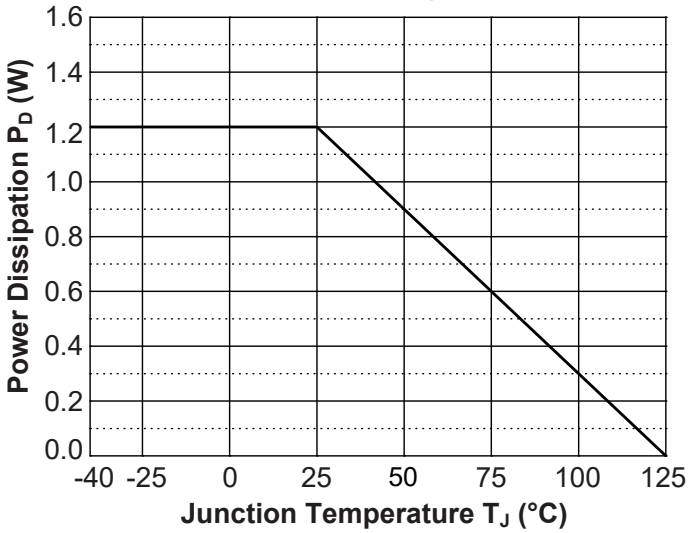

Downloaded From Oneyac.com

7 Specifications

7.6 Typical Characteristics (continued)

CJ7806 (V_{OUT} = 6.0V, C_{IN} = 0.33μF, C_{OUT} = 0.1μF, T_J = 25°C, unless otherwise specified)

Output Characteristics

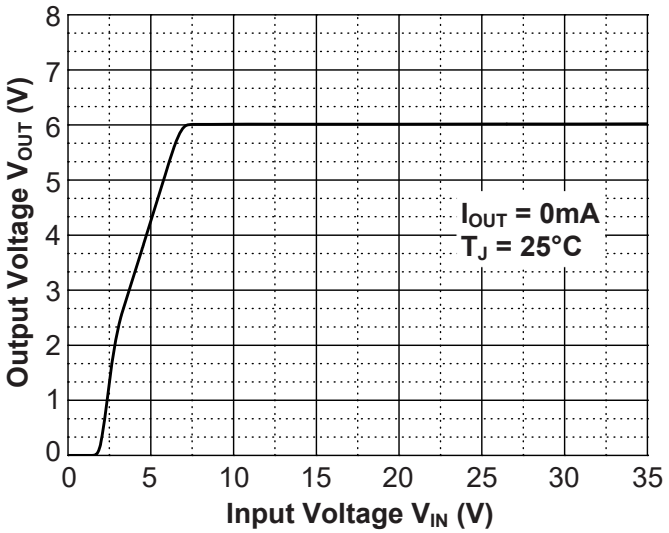

Dropout Characteristics

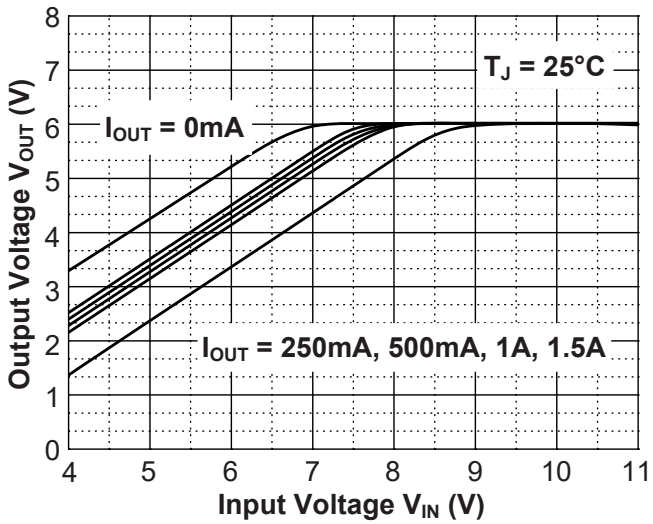

Quiescent Current

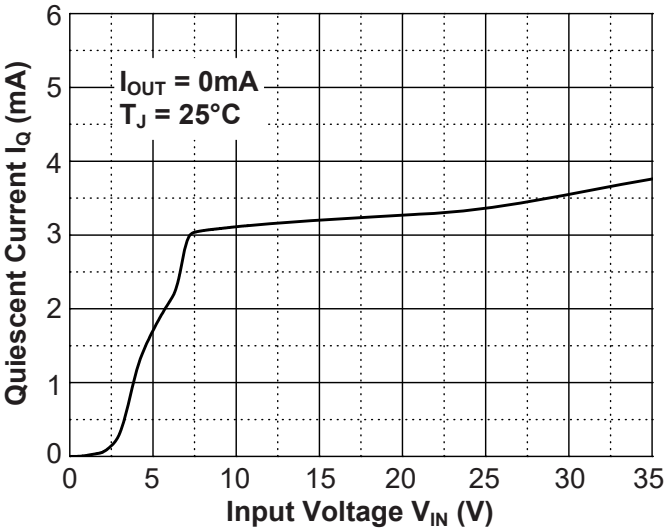

Current Cut-off Grid Voltage

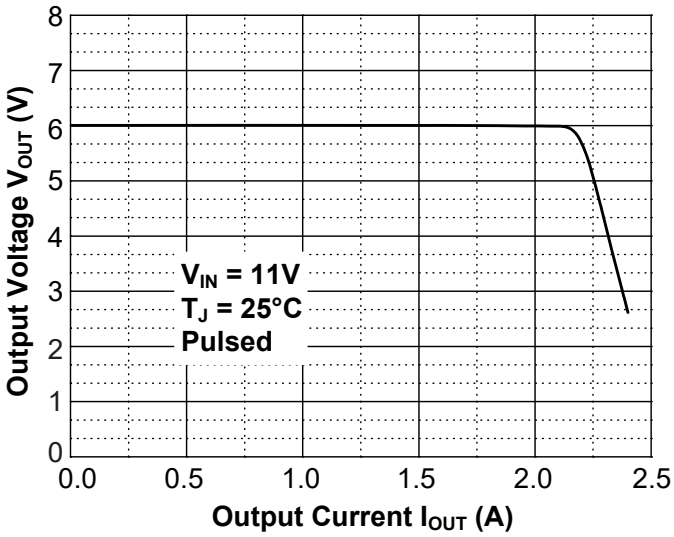

Output Voltage vs. Junction Temperature

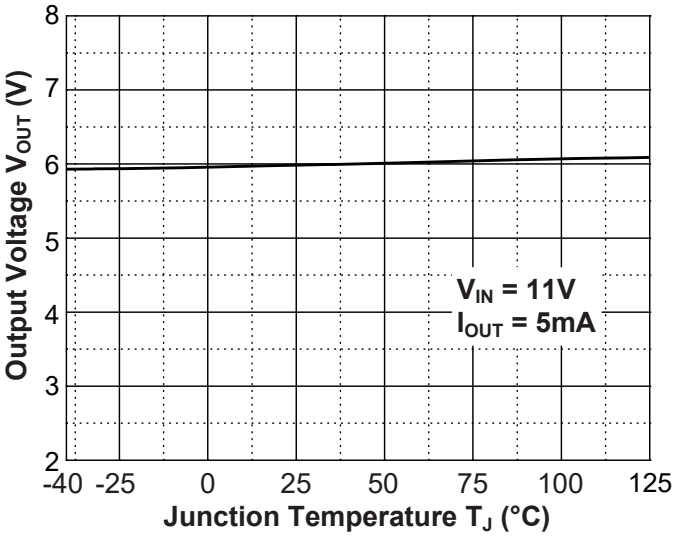

Power Derating Curve

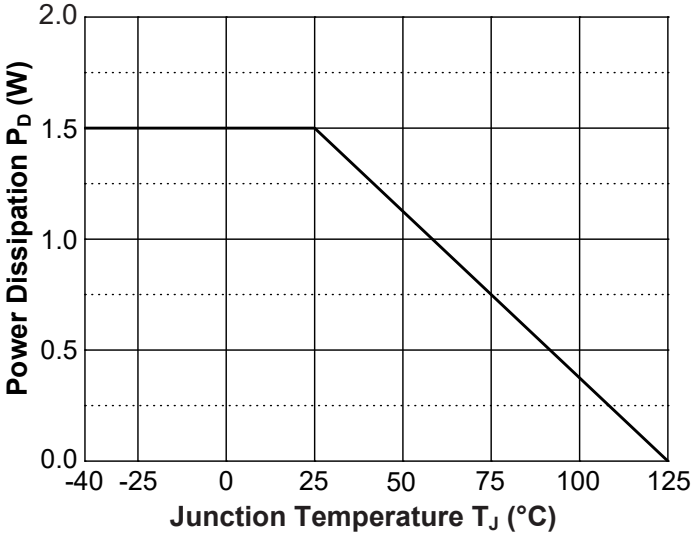

Downloaded From Oneyac.com

7 Specifications

7.6 Typical Characteristics (continued)

CJ7808 (V_{OUT} = 8.0V, C_{IN} = 0.33μF, C_{OUT} = 0.1μF, T_J = 25°C, unless otherwise specified)

Output Characteristics

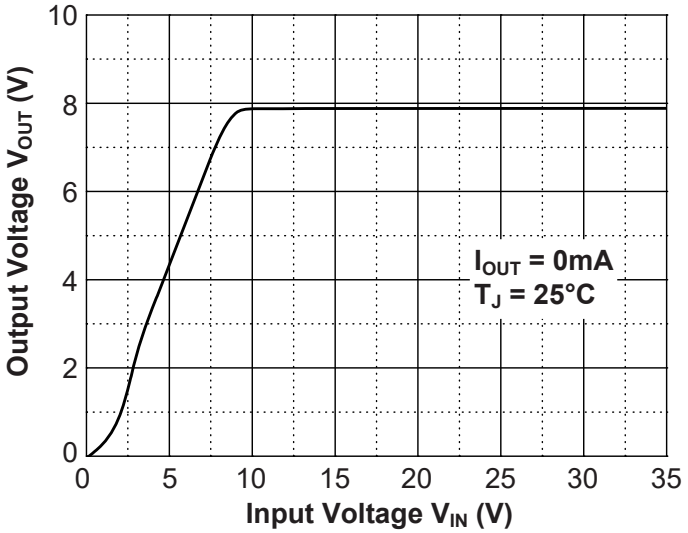

Dropout Characteristics

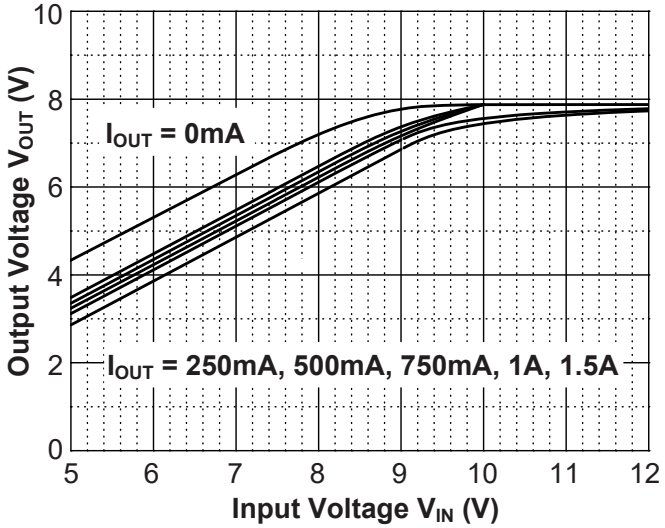

Quiescent Current

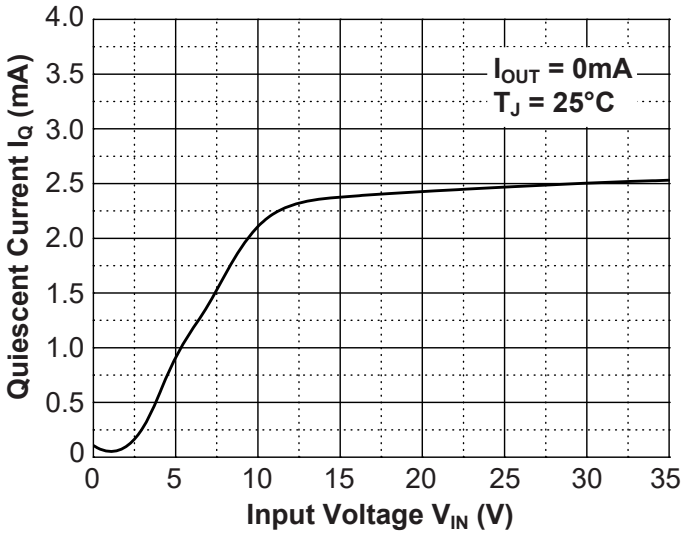

Current Cut-off Grid Voltage

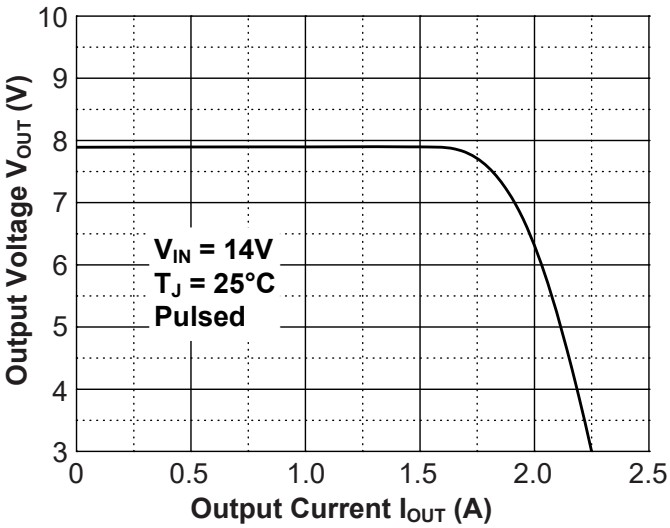

Output Voltage vs. Junction Temperature

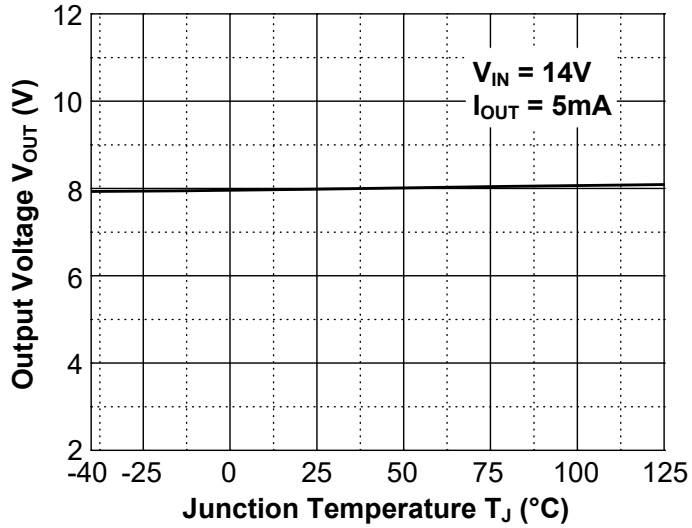

Power Derating Curve

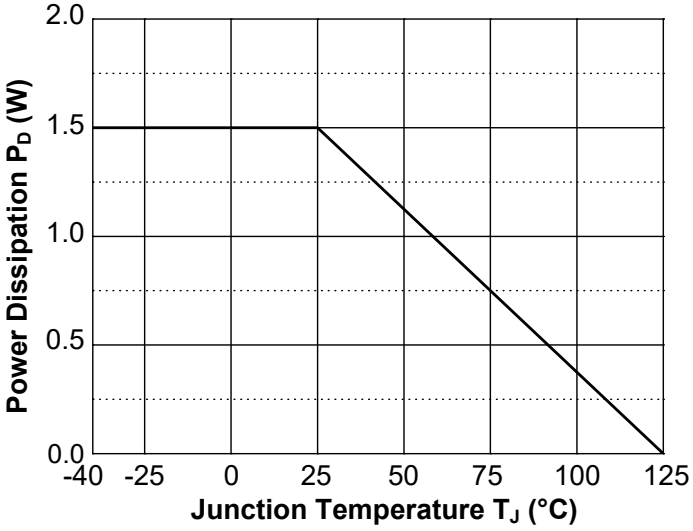

Downloaded From Oneyac.com

7 Specifications

7.6 Typical Characteristics (continued)

CJ7809 (V_{OUT} = 9.0V, C_{IN} = 0.33μF, C_{OUT} = 0.1μF, T_J = 25°C, unless otherwise specified)

Output Characteristics

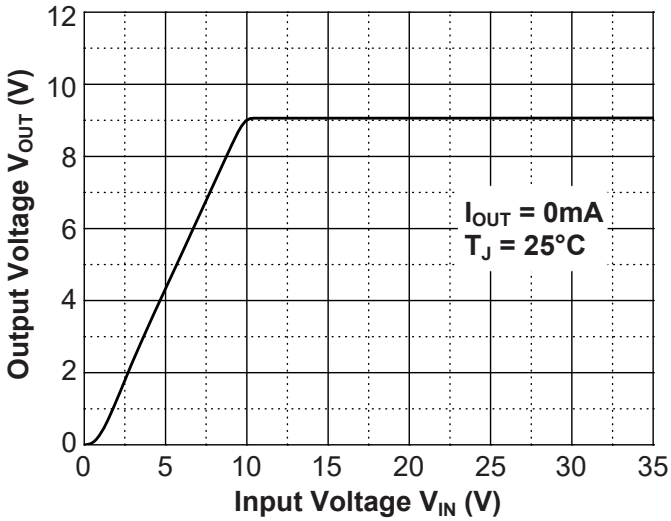

Dropout Characteristics

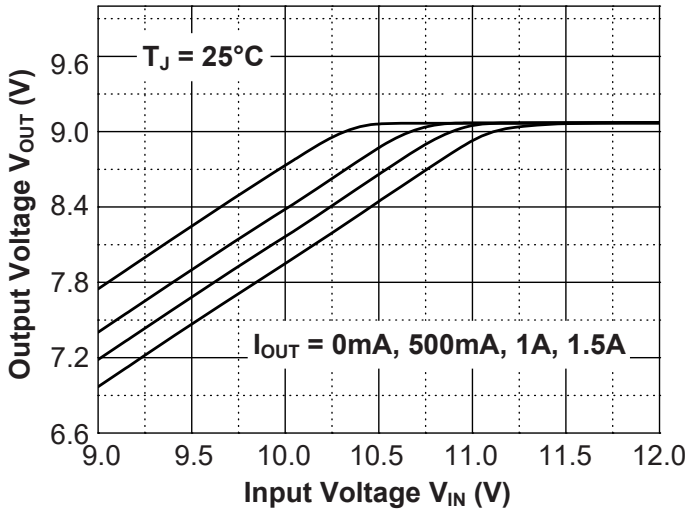

Quiescent Current

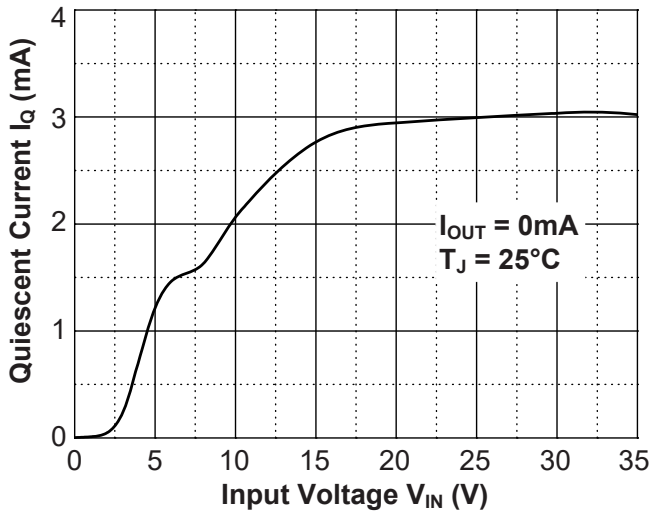

Current Cut-off Grid Voltage

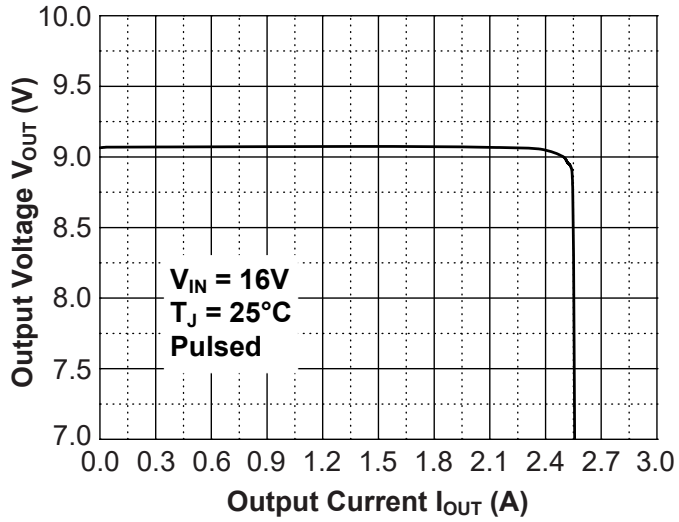

Output Voltage vs. Junction Temperature

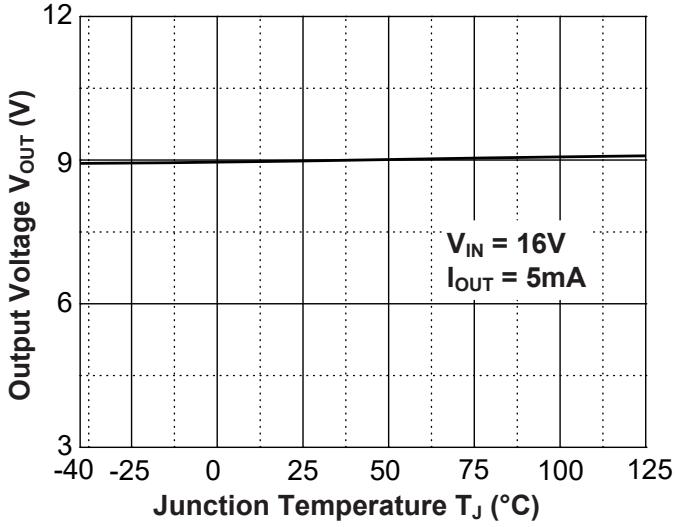

Power Derating Curve

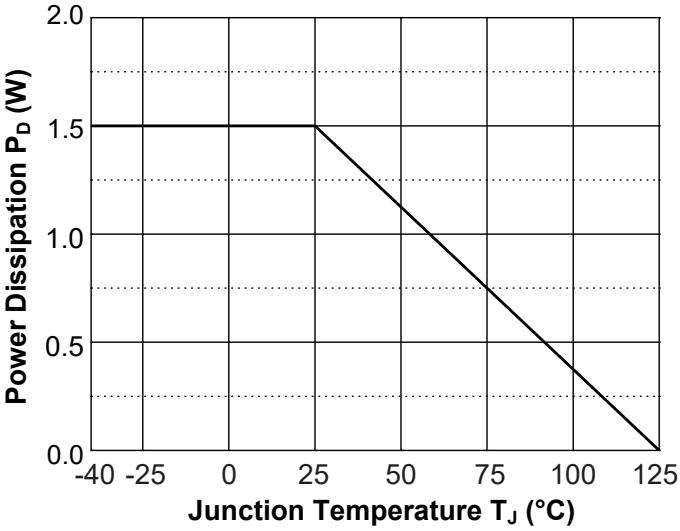

Downloaded From Oneyac.com

7 Specifications

7.6 Typical Characteristics (continued)

CJ7812 (V_{OUT} = 12V, C_{IN} = 0.33μF, C_{OUT} = 0.1μF, T_J = 25°C, unless otherwise specified)

Output Characteristics

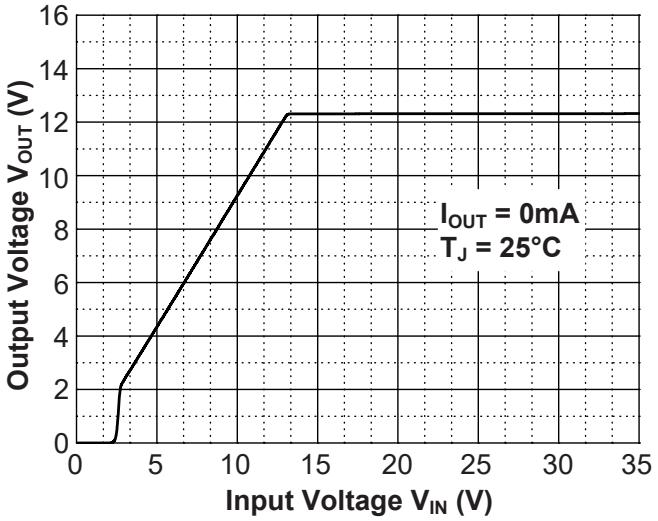

Dropout Characteristics

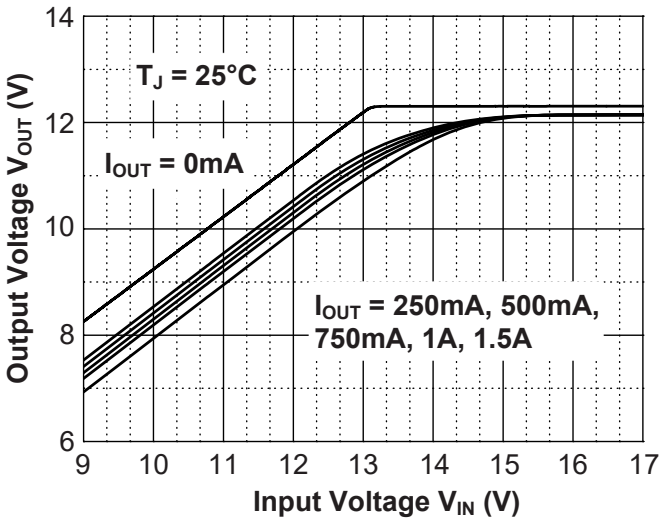

Quiescent Current

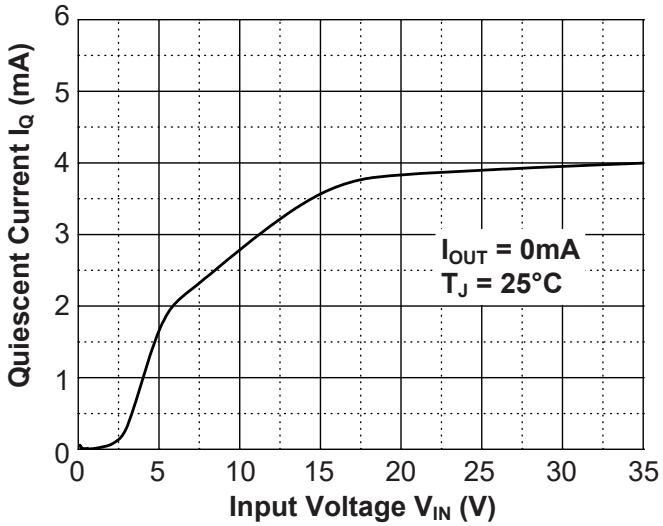

Current Cut-off Grid Voltage

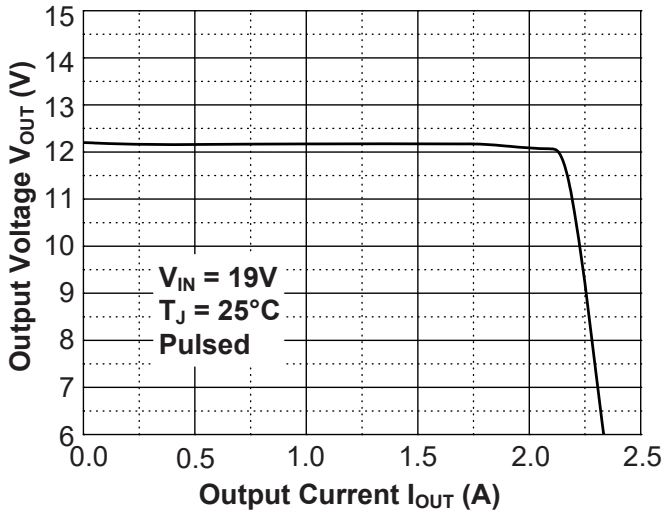

Output Voltage vs Junction Temperature

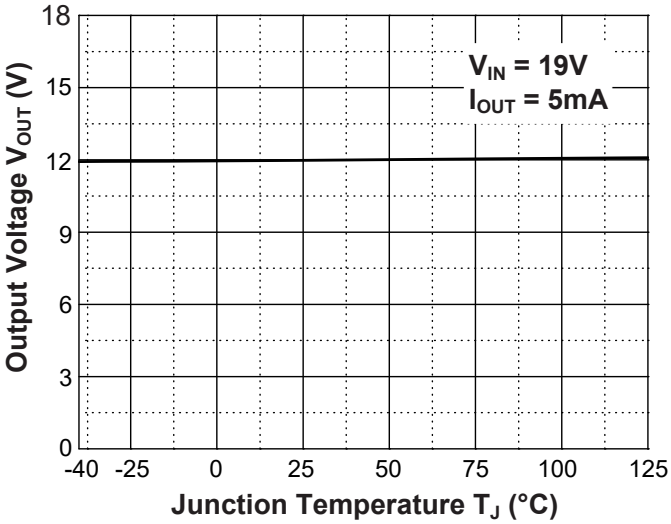

Power Derating Curve

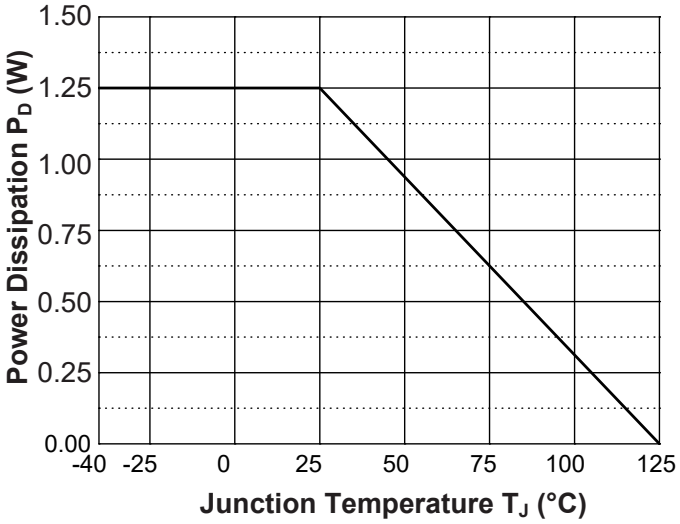

Downloaded From Oneyac.com

8 Detailed Description

8.1 Description

The CJ78 series is a group of fixed output positive voltage regulators. It integrates current limit, short-circuit protection, thermal overload protection and safe working area protection of output transistor, which makes it relatively difficult to be damaged. By setting the resistance value of peripheral resistance, the CJ78 series can also be used as adjustable voltage output regulator.

8.2 Representative Schematic Diagram

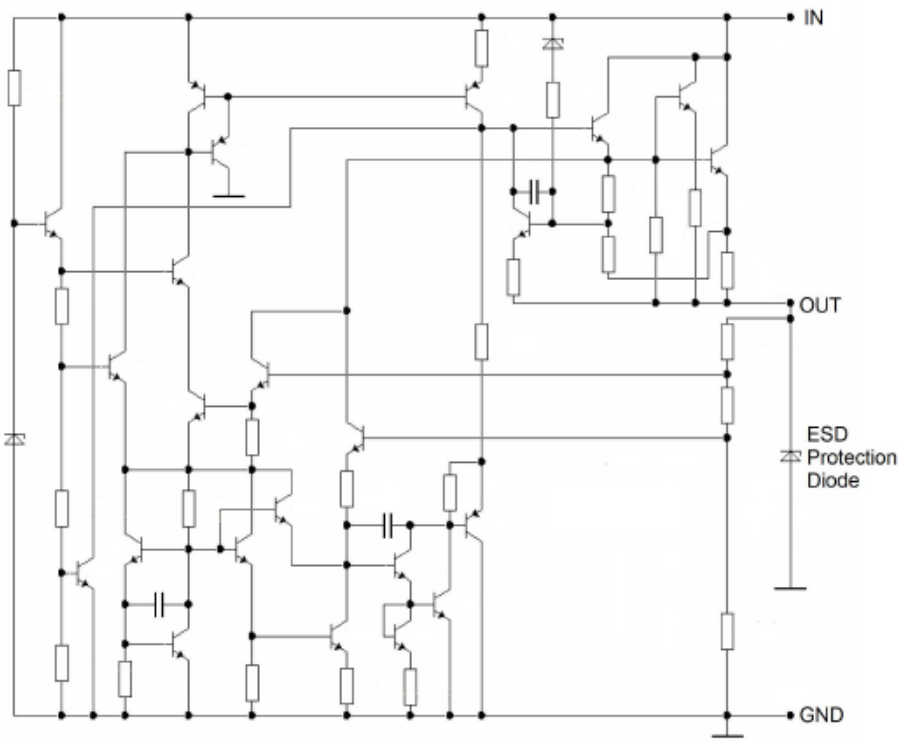

8.3 Feature Description

Input Voltage

When the input voltage is lower than the rated range of the data sheet, the device will lose the regulation function of stabilizing the output voltage, that is, it is unable to maintain the output voltage within the rated range. When the input voltage is higher than the rated range of the data sheet, the device may cause irreversible damage or failure due to exceeding the maximum rated range of electrical stress.

Internal Current Limit & Short Circuit Protection

The CJ78 series has built-in current limit and short circuit protection mechanism. When the output current of the device is too high, the output of the device will be shut down. When the output of the device is short circuited to ground, the output of the device will also be shut down and the output current will be maintained within a certain range.

Downloaded From Oneyac.com

8 Detailed Description

8.3 Feature Description (continued)

Thermal Shutdown Protection

The CJ78 series has thermal shutdown protection mechanism. When the junction temperature exceeds the rated temperature range for normal operation in the data sheet, the device will enter the thermal shutdown state. At this time, the output voltage of the device will be reduced to prevent catastrophic damage to the chip due to accidental heat. When the junction temperature decreases and no longer remains too high, the device will release the thermal shutdown and output normally. To ensure reliable operation, please limit the junction temperature to the specified range of *Recommended Operating Conditions* in the data sheet. Applications that exceed the recommended temperature range may cause the equipment to exceed its operating specifications.
Although the internal protection circuitry of the device is designed to protect against thermal overall conditions, this circuitry is not intended to replace proper heat sinking. Continuously running the device into thermal shutdown or above the maximum recommended junction temperature reduces long-term reliability.

Output Current

Due to the internal integration of thermal shutdown protection, in the case of large output current, the device may enter the thermal shutdown state because the junction temperature is higher than the rated value in the data sheet. Therefore, the appropriate package should be selected for circuit design according to the heat dissipation power consumption of the package and the effective connection thermal resistance with the environment, so as to make the device emit more heat energy, so as to ensure the maximum load current capacity of the device. If the circuit design is appropriate and the device has good heat dissipation conditions, the CJ78 series can output a current of up to 1.5A.

Downloaded From Oneyac.com

9 Application and Implementation

9.1 Risk Alert and Precautions

The CJ78 series is designed for thermal protection, output short circuit protection and output transistor SOA protection. However, like any IC regulator, precautions are necessary to reduce the possibility of accidental damage to the regulator. The following describes the possible causes of unit damage or failure:

Electrostatic Discharge (ESD)

Electrostatic discharge (ESD) is a common near-field hazard source. It comes from many sources, such as human body, mechanical equipment and electronic components themselves. ESD can cause phenomena such as high voltage and instantaneous high current in a very short time, resulting in damage or failure of the device due to electric shock.

Instantaneous Electrical Surge

In some applications, a short duration but high energy spike may occur in the circuit, including peak voltage and surge current. They may cause unstable operation of the regulator, accelerated aging and potential hazards, and even damage or malfunction of the regulator. These peaks are usually more likely to occur in hot-plug, switch inductance, heavy-load, and other types of circuits.

Precautions for ESD and Electrical Surge

In the practical application of the circuit, adopting the following suggestions can reduce the possibility of device failure due to the above reasons to a certain extent.

1. Place a TVS between the IN and GND of the voltage regulator to absorb the peak voltage that may be generated due to ESD or other reasons. As shown in Figure 9-1;
2. Place a resistor with appropriate resistance in series before the IN of the voltage regulator, which can help the voltage regulator share part of the energy in case of surge. The resistance value of the resistance should not be too large. The specific resistance value depends on the application of the circuit. Generally, the resistance value of this resistance does not exceed 20Ω. As shown in Figure 9-2.

For the CJ78 series, it is recommended that the input voltage should not exceed 17V and the peak voltage should not exceed 35V. **When the input voltage is greater than 17V, or the peak voltage that may be greater than 35V may appear in the practical circuit, it is recommended to adopt the circuit layout shown in Figure 9-2 in the circuit design.**

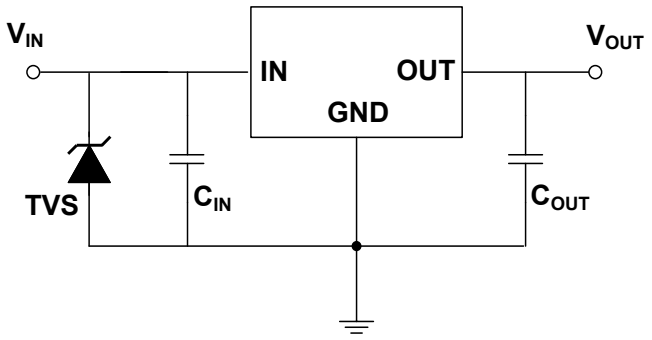

Figure 9-1. TVS is used at IN

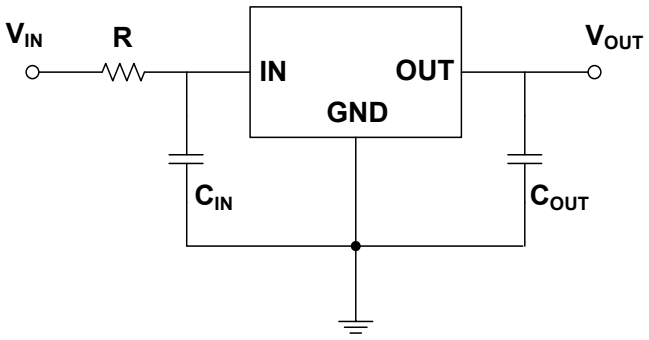

Figure 9-2. Resistance is used at IN

Downloaded From Oneyac.com

9 Application and Implementation

9.1 Risk Alert and Precautions (continued)

Regulator Input Short Circuit

In case of short circuit to ground at the input of the voltage regulator, the input of the voltage regulator will be pulled down to the ground potential. At this time, if the capacitance value of the output pin is large, a large amount of charge stored in it will enter the regulator from the output pin of the regulator and generate internal discharge, which may damage the output diodes and transistors inside the regulator, resulting in damage to the regulator. As shown in Figure 9-3.

This phenomenon may be avoided by connecting a protection diode at the input and output pins. The diode can shunt the discharge current of the capacitor to achieve protection in the case of short circuit to ground at the input pin. If the output capacitance is small (Capacitance value is less than 10μF), the protection diode is generally not required.

Increase the Output Voltage above the Input Voltage

If the output voltage is forcibly increased above the input voltage, because the potential at the output pin of the regulator is higher than the input pin, the internal working of the regulator under low current conditions may be damaged due to reverse internal discharge. Such damage mechanism is similar to the *Regulator Input Short Circuit*.

Float the Ground Pin of the Regulator

When the ground pin of the regulator floats, the voltage at the output is close to the voltage at the input, which may damage the internal circuit of the regulator. Even if the ground terminal is connected to the ground terminal from floating under the power on state, it may still cause damage to the voltage regulator. This kind of situation usually occurs when the voltage regulator module on the card is connected to the power supply. To reduce the possibility of such faults, the regulator ground terminal should be grounded before the regulator is connected to the power supply. Before the voltage regulator on the card is inserted into the power on socket, the power supply shall be turned off and the thermal shutdown shall stop working. If the power on state must be maintained, the voltage regulator must be grounded. As shown in Figure 9-4.

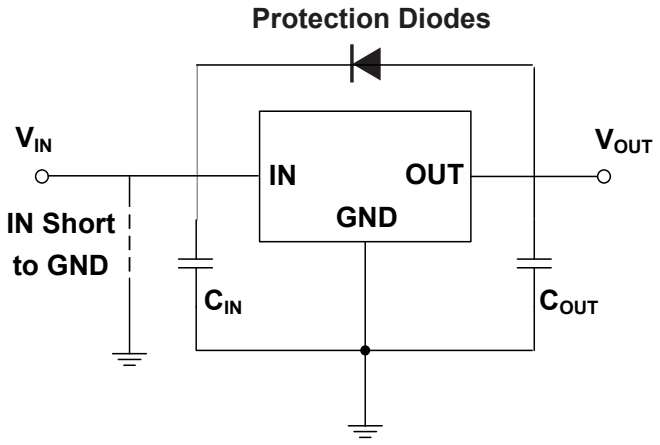

Figure 9-3. Regulator Input Short Circuit

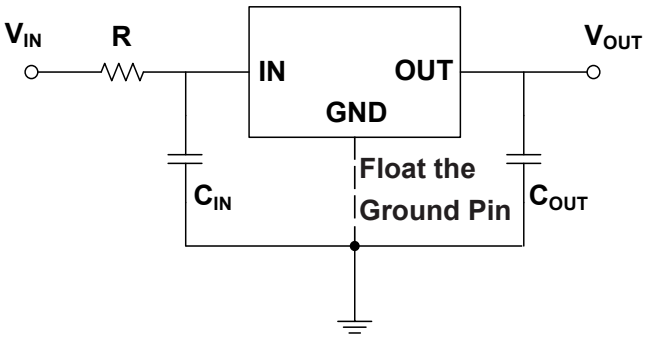

Figure 9-4. Float the Ground Pin

Downloaded From Oneyac.com

9 Application and Implementation

9.1 Risk Alert and Precautions (continued)

Large Output Capacitance

The CJ78 series can obtain better transient response with the help of output capacitance. However, if the output capacitor is relatively large, the surge current generated by the charging of the output capacitor will also be large at the moment of power on of the regulator, and the large surge current passing through the regulator may damage the internal circuit. When the output capacitance is large, adopting the circuit design shown in Figure 9-2 will reduce the possibility of damage to the device due to large surge current to a certain extent. It is recommended that the selection of output capacitor should not exceed 20μF. **If the selection of output capacitor exceeds 20μF, it is recommended to adopt the circuit design in Figure 9-2 to reduce the possibility of accidental failure of the device due to large surge current during power on.**

9.2 Application Information

Bypass Capacitance Selection

A capacitance between IN and GND (C_{IN}) is required if the regulator is located far from the power supply filter. It is recommended to use a 0.33μF capacitor for C_{IN}, and the capacitor (C_{IN}) should be placed as close to the device IN pin and GND pin as possible.

It is recommended to use a 0.1μF capacitor between OUT and GND (C_{OUT}), and the capacitor should be placed as close as possible between OUT and GND. The output capacitance can limit the high-frequency noise and help the device obtain the best stability and transient response.

The tolerance and temperature coefficient of the input and output capacitor (C_{IN} and C_{OUT}) must be considered to ensure that the capacitor can work normally within the rated working ambient temperature and rated working conditions of the equipment.

It is recommended that the output capacitor (C_{OUT}) should not exceed 20μF. When the output capacitor (C_{OUT}) exceeds 20μF, it is recommended to use the circuit layout shown in Figure 9-2. See *Large Output Capacitance* for more details.

Design Requirements and Procedure

The CJ78 series is mainly used to provide fixed output voltage regulation, the output voltage is set based on the device variant, which is available in 5.0V, 6.0V, 8.0V, 9.0V and 12V regulator options, and it requires a very small number of equipment components. If the regulator is far from the power filter, the input capacitor C_{IN} is required. The bypass capacitor C_{OUT} is used at the output to obtain the best stability and transient response. These capacitors must be as close to the regulator as possible. The simplest implementation of the CJ78 series is shown in Figure 9-8.

Downloaded From Oneyac.com

9 Application and Implementation

9.3 Test Circuits

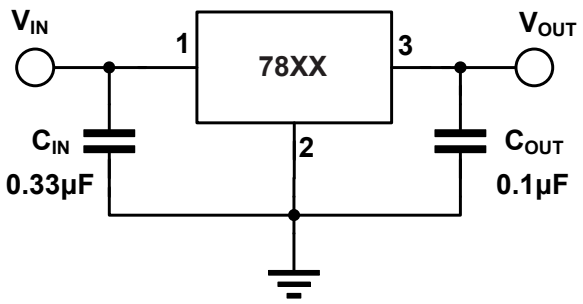

Figure 9-5. DC Parameters

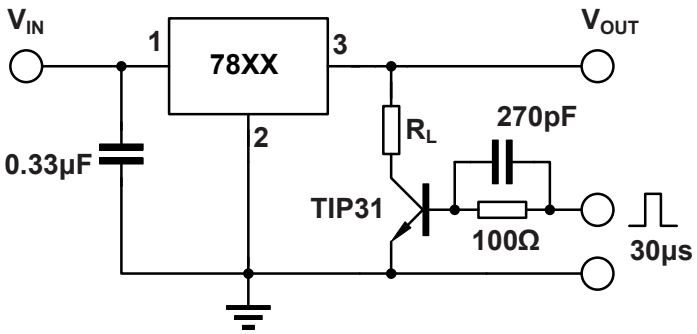

Figure 9-6. Load Regulation

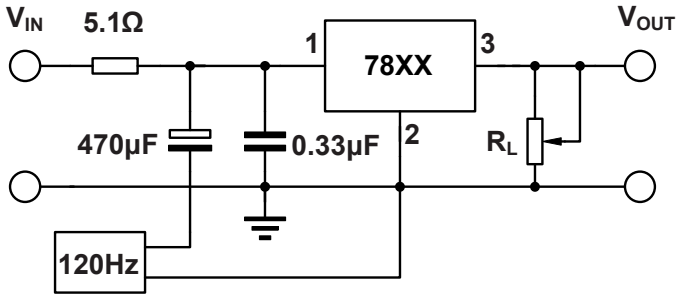

Figure 9-7. Ripple Rejection

9.4 System Example

The "XX" in the "78XX" represents the output voltage, for example, if V_{OUT} = 5.0V, the "78XX" is "7805".

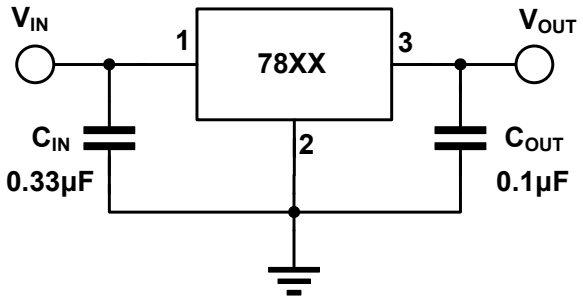

(1) Conventional Circuit

Used for the normal form of circuit

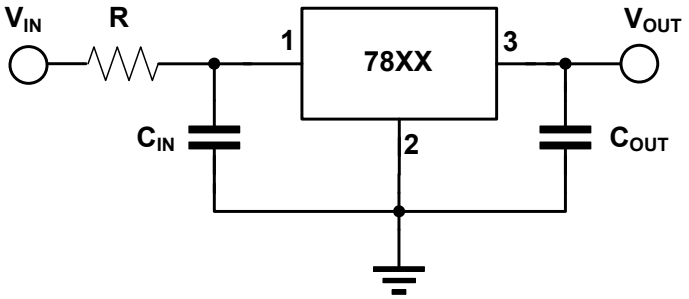

(2) Resistance are used at IN

Used for circuits that may have large electrical surges or use large capacitors

Figure 9-8. Fixed Output Regulator

Note: For more details, see the part *Risk Alert and Precautions*.

Downloaded From Oneyac.com

9 Application and Implementation

9.4 System Example(continued)

The "XX" in the "78XX" represents the output voltage, for example, if V_{OUT} = 5.0V, the "78XX" is "7805".

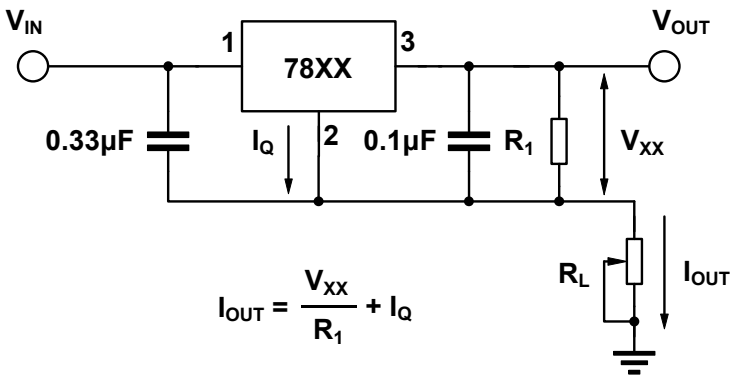

Figure 9-9. Constant Current Regulator

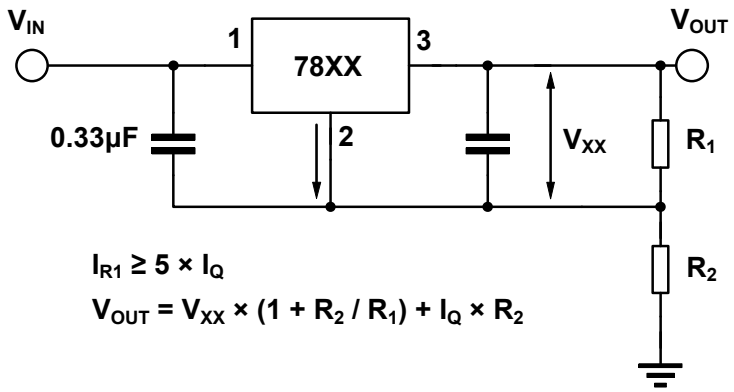

Figure 9-10. Circuit for Increasing Regulator Output Voltage

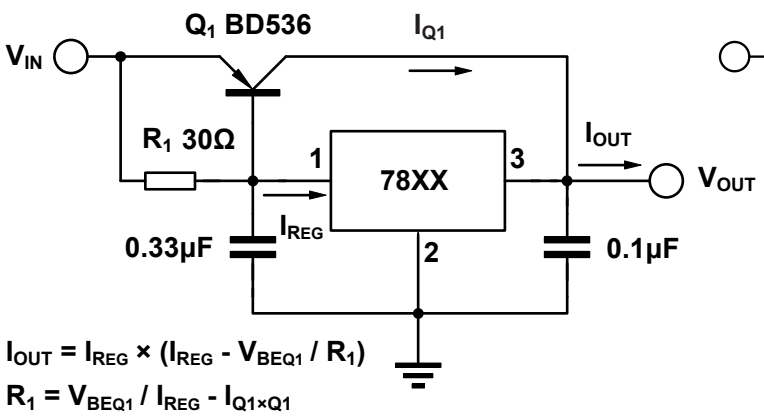

Figure 9-11. High Current with Voltage Regulator

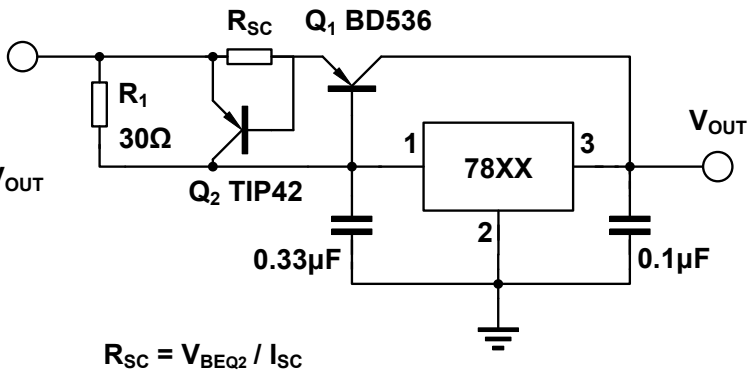

Figure 9-12. High Output Current Short Circuit Protection

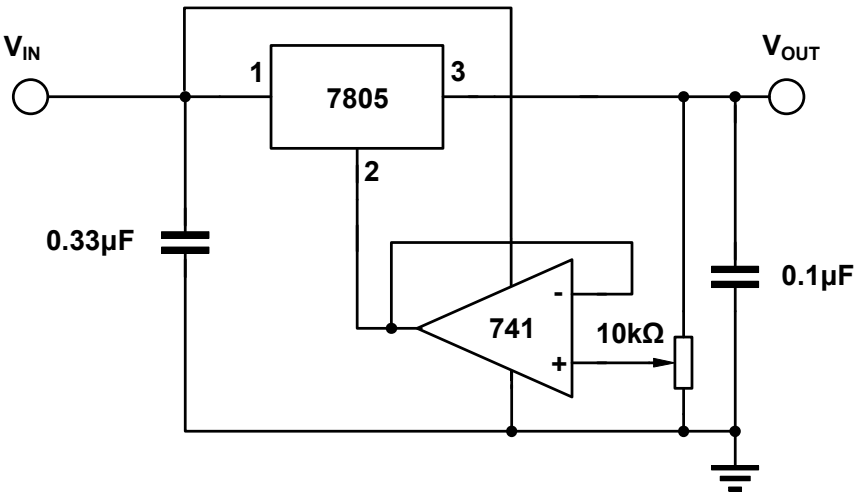

Figure 9-13. Adjustable Output

Downloaded From Oneyac.com

9 Application and Implementation

9.4 System Example(continued)

The "XX" in the "78XX" represents the output voltage, for example, if V_{OUT} = 5.0V, the "78XX" is "7805".

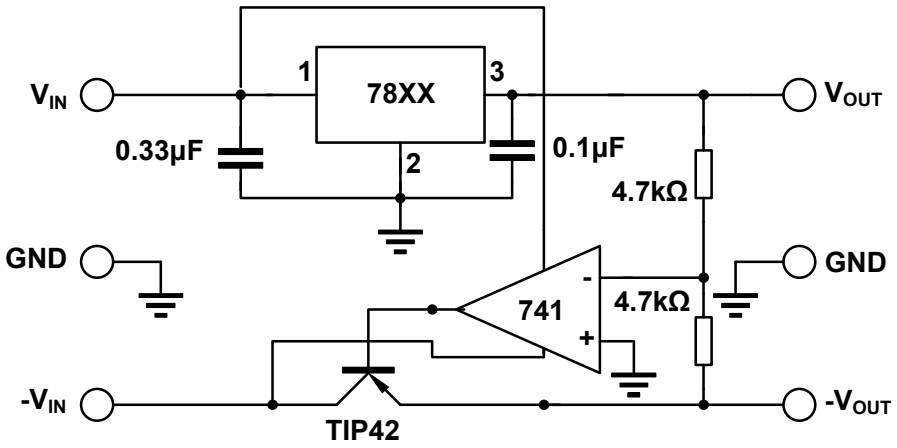

Figure 9-14. Tracking Voltage Regulator

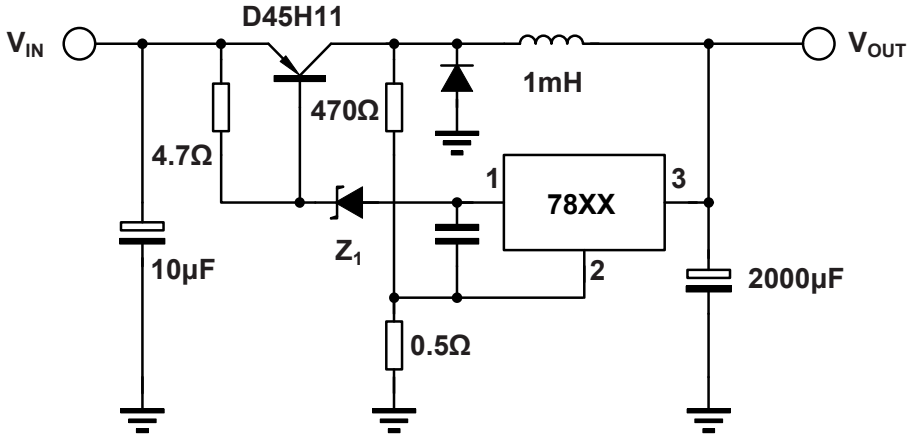

Figure 9-15. Switching Regulator

Downloaded From Oneyac.com

9 Application and Implementation

9.5 Layout Guidelines

In order to make the regulator have appropriate output voltage and less noise, the circuit design including the CJ78 series must follow certain rules to improve the output characteristics of the regulator and reduce the possibility of equipment failure. The following are some suggestions for the circuit layout of the CJ78 series:

1. In the practical application of the designed circuit, the conductor through which the load current flows usually has a certain parasitic tracking inductance. Widening these wires can improve the noise characteristics of the regulator output;
2. Selecting a suitable capacitor can improve the output transient and PSRR, and the position of the bypass capacitor must be set at the position of the corresponding pin, which should be as close to the IC as possible. The input capacitance (C_{IN}) of a typical application circuit is 0.33μF. The output capacitance (C_{OUT}) is 0.1μF. If the output capacitance is large (output capacitor C_{OUT} exceeds 20μF), it is recommended to use the circuit layout in Figure 9-8-(2);
3. When the input voltage is greater than 17V or the peak voltage greater than 35V may appear in the actual circuit, it is recommended to use the circuit layout in Figure 9-8-(2);
4. In the practical application of circuit design, the input of voltage regulator may be short circuited to ground for some reasons. At this time, the surge current at the output may damage the voltage regulator. Placing an external diode between the output and input can prevent damage to the regulator to some extent.

NOTE

The application information in this section is not part of the data sheet component specification, and JSCJ makes no commitment or statement to guarantee its accuracy or completeness. Customers are responsible for determining the rationality of corresponding components in their circuit design and making tests and verifications to ensure the normal realization of their circuit design.

Downloaded From Oneyac.com

10 Mechanical Information

10.1 TO-220-3L Mechanical Information

TO-220-3L Outline Dimensions

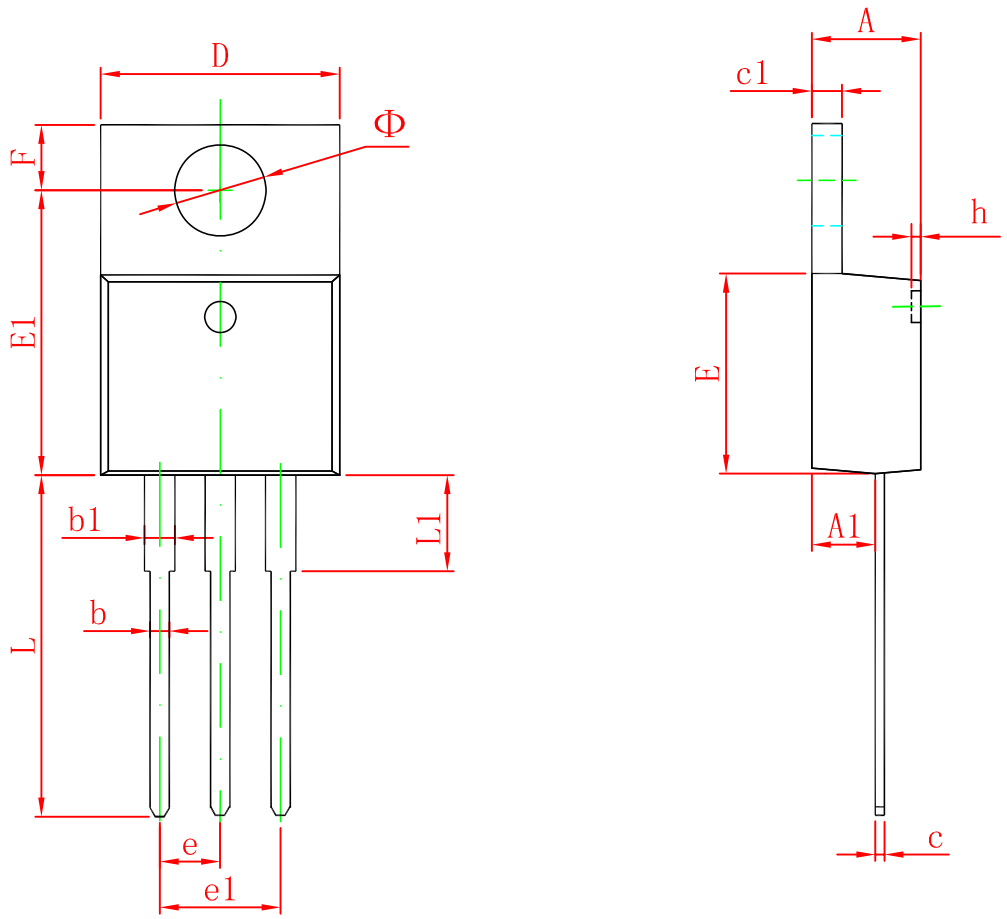

Symbol	Dimensions In Millimeters		Dimensions In Inches	
	Min	Max	Min	Max
A	4.470	4.670	0.176	0.184
A1	2.520	2.820	0.099	0.111
b	0.710	0.910	0.028	0.036
b1	1.170	1.370	0.046	0.054
c	0.310	0.530	0.012	0.021
c1	1.170	1.370	0.046	0.054
D	10.010	10.310	0.394	0.406
E	8.500	8.900	0.335	0.350
E1	12.060	12.460	0.475	0.491
e	2.540 TYP		0.100 TYP	
e1	4.980	5.180	0.196	0.204
F	2.590	2.890	0.102	0.114
h	0.000	0.300	0.000	0.012
L	13.400	13.800	0.528	0.543
L1	3.560	3.960	0.140	0.156
Φ	3.735	3.935	0.147	0.155

Downloaded From Oneyac.com

10 Mechanical Information

10.2 TO-220F Mechanical Information

TO-220F Outline Dimensions

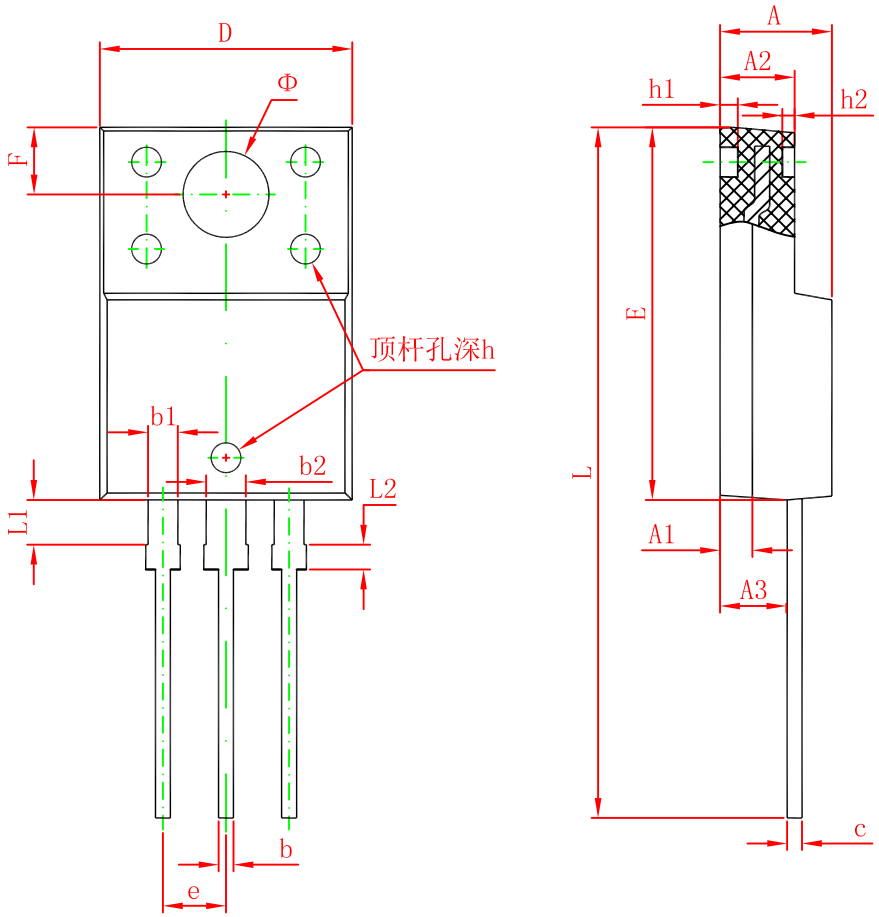

Symbol	Dimensions In Millimeters		Dimensions In Inches	
	Min.	Max.	Min.	Max.
A	4.300	4.700	0.169	0.185
A1	1.300 REF.		0.051 REF.	
A2	2.800	3.200	0.110	0.126
A3	2.500	2.900	0.098	0.114
b	0.500	0.750	0.020	0.030
b1	1.100	1.350	0.043	0.053
b2	1.500	1.750	0.059	0.069
c	0.500	0.750	0.020	0.030
D	9.960	10.360	0.392	0.408
E	14.800	15.200	0.583	0.598
e	2.540 TYP.		0.100 TYP.	
F	2.700 REF.		0.106 REF.	
Φ	3.500 REF.		0.138 REF.	
h	0.000	0.300	0.000	0.012
h1	0.800 REF.		0.031 REF.	
h2	0.500 REF.		0.020 REF.	
L	28.000	28.400	1.102	1.118
L1	1.700	1.900	0.067	0.075
L2	0.900	1.100	0.035	0.043

Downloaded From Oneyac.com

10 Mechanical Information

10.3 TO-251-3L Mechanical Information

TO-251-3L Outline Dimensions

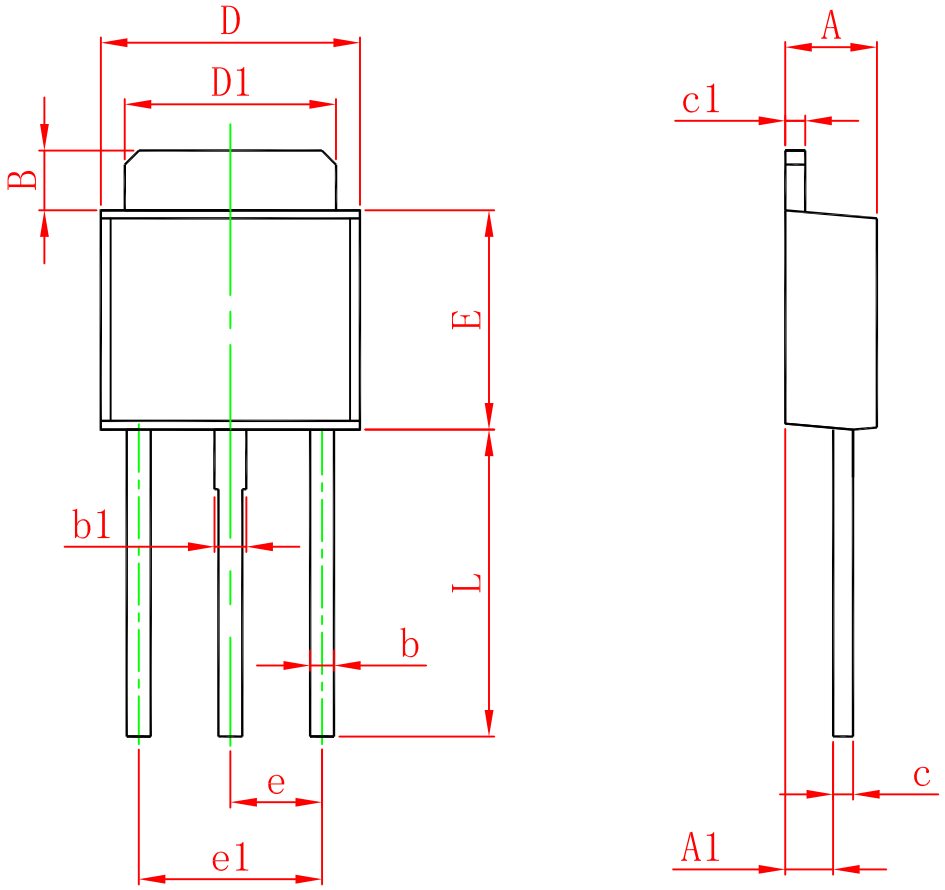

Symbol	Dimensions In Millimeters		Dimensions In Inches	
	Min.	Max.	Min.	Max.
A	2.200	2.400	0.087	0.094
A1	1.050	1.350	0.042	0.054
B	1.350	1.650	0.053	0.065
b	0.500	0.700	0.020	0.028
b1	0.700	0.900	0.028	0.035
c	0.430	0.580	0.017	0.023
c1	0.430	0.580	0.017	0.023
D	6.350	6.650	0.250	0.262
D1	5.200	5.400	0.205	0.213
E	5.400	5.700	0.213	0.224
e	2.300 TYP.		0.091 TYP.	
e1	4.500	4.700	0.177	0.185
L	7.500	7.900	0.295	0.311

Downloaded From Oneyac.com

10 Mechanical Information

10.4 TO-251S Mechanical Information

TO-251S Outline Dimensions

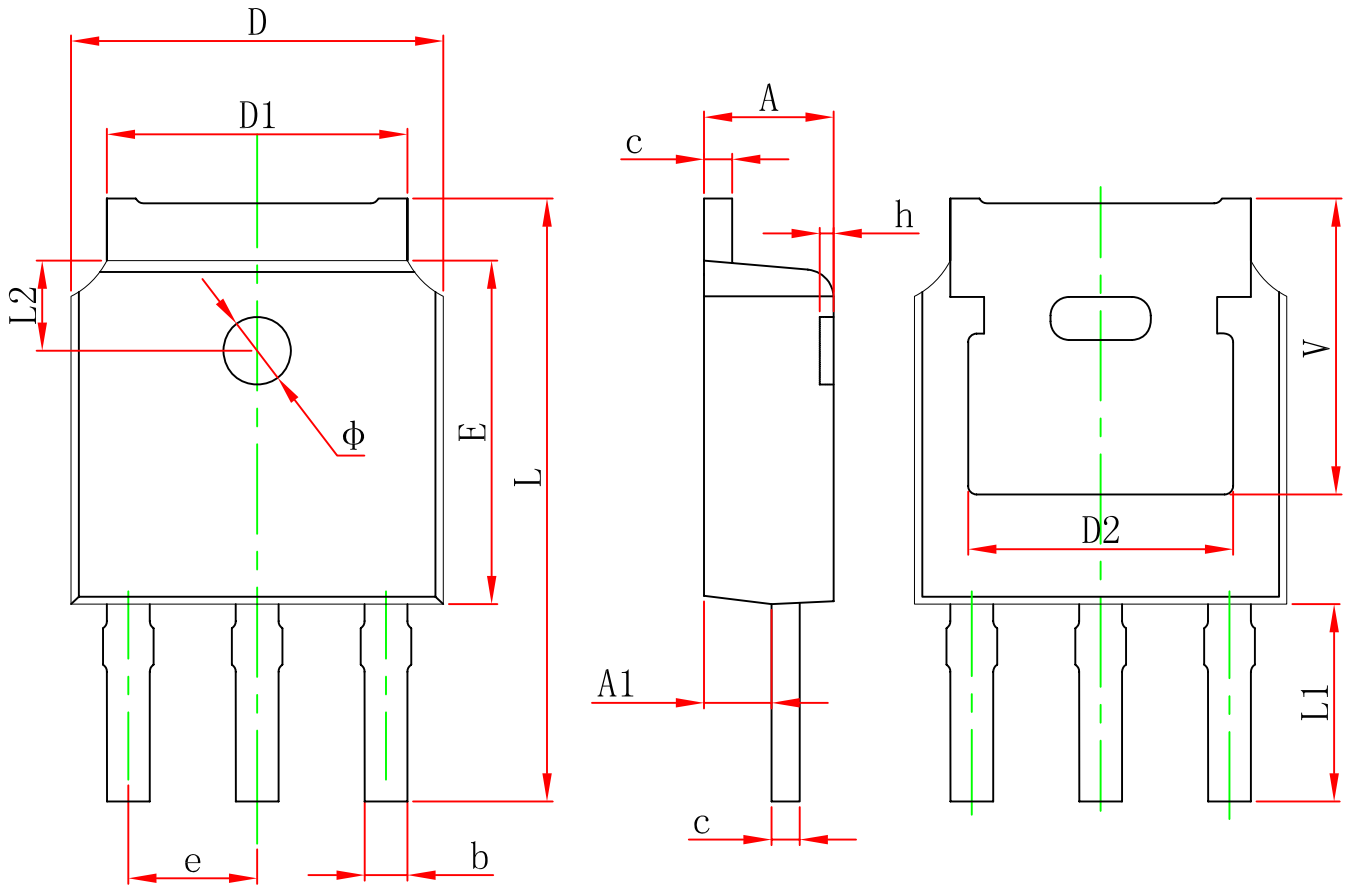

Symbol	Dimensions In Millimeters		Dimensions In Inches	
	Min.	Max.	Min.	Max.
A	2.200	2.400	0.087	0.094
A1	0.860	1.160	0.034	0.046
b	0.660	0.860	0.026	0.034
c	0.460	0.580	0.018	0.023
D	6.500	6.700	0.256	0.264
D1	5.100	5.460	0.201	0.215
D2	4.830 REF.		0.190 REF.	
E	6.000	6.200	0.236	0.244
e	2.186	2.386	0.086	0.094
L	10.400	11.000	0.409	0.433
L1	3.300	3.700	0.130	0.146
L2	1.600 REF.		0.063 REF.	
Φ	1.100	1.300	0.043	0.051
h	0.000	0.300	0.000	0.012
V	5.350 REF.		0.211 REF.	

Downloaded From Oneyac.com

10 Mechanical Information

10.5 TO-252-2L Mechanical Information

TO-252-2L Outline Dimensions

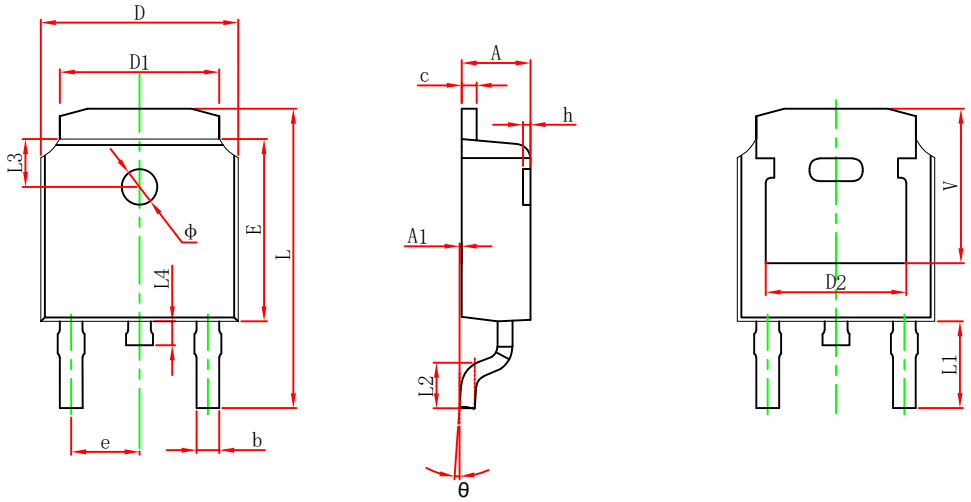

Symbol	Dimensions In Millimeters		Dimensions In Inches	
	Min.	Max.	Min.	Max.
A	2.200	2.400	0.087	0.094
A1	0.000	0.127	0.000	0.005
b	0.635	0.770	0.025	0.030
c	0.460	0.580	0.018	0.023
D	6.500	6.700	0.256	0.264
D1	5.100	5.460	0.201	0.215
D2	4.830 REF.		0.190 REF.	
E	6.000	6.200	0.236	0.244
e	2.186	2.386	0.086	0.094
L	9.712	10.312	0.382	0.406
L1	2.900 REF.		0.114 REF.	
L2	1.400	1.700	0.055	0.067
L3	1.600 REF.		0.063 REF.	
L4	0.600	1.000	0.024	0.039
Φ	1.100	1.300	0.043	0.051
θ	0°	8°	0°	8°
h	0.000	0.300	0.000	0.012
V	5.250 REF.		0.207 REF.	

TO-252-2L Suggest Pad Layout

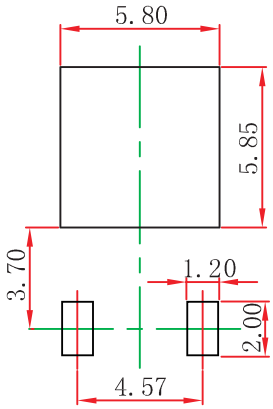

NOTE:

1. Controlling dimension: in millimeters.
2. General tolerance: ±0.05mm.
3. The pad layout is for reference purposes only.

Downloaded From Oneyac.com

10 Mechanical Information

10.6 TO-263-2L Mechanical Information

TO-263-2L Outline Dimensions

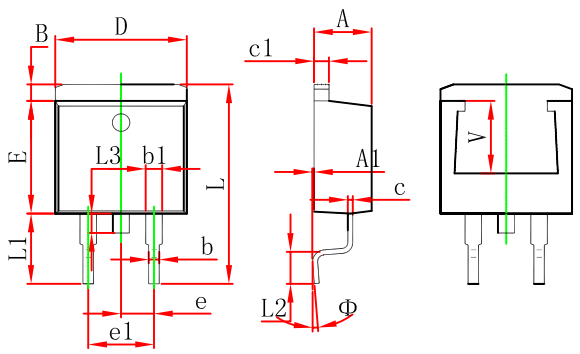

Symbol	Dimensions In Millimeters		Dimensions In Inches	
	Min.	Max.	Min.	Max.
A	4.470	4.670	0.176	0.184
A1	0.000	0.150	0.000	0.006
B	1.120	1.420	0.044	0.056
b	0.710	0.910	0.028	0.036
b1	1.170	1.370	0.046	0.054
c	0.310	0.530	0.012	0.021
c1	1.170	1.370	0.046	0.054
D	10.010	10.310	0.394	0.406
E	8.500	8.900	0.335	0.350
e	2.540 TYP.		0.100 TYP.	
e1	4.980	5.180	0.196	0.204
L	14.940	15.500	0.588	0.610
L1	4.950	5.450	0.195	0.215
L2	2.340	2.740	0.092	0.108
L3	1.300	1.700	0.051	0.067
Φ	0°	8°	0°	8°
V	5.600 REF.		0.220REF.	

TO-263-2L Suggest Pad Layout

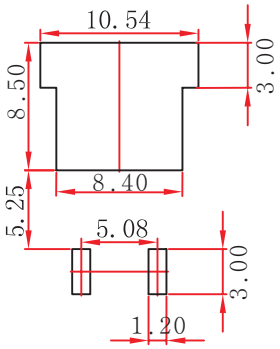

NOTE:

1. Controlling dimension: in millimeters.
2. General tolerance: ±0.05mm.
3. The pad layout is for reference purposes only.

Downloaded From Oneyac.com

11 Packaging Information

11.1 TO-252-2L Tape and Reel Information

TO-252-2L Embossed Carrier Tape

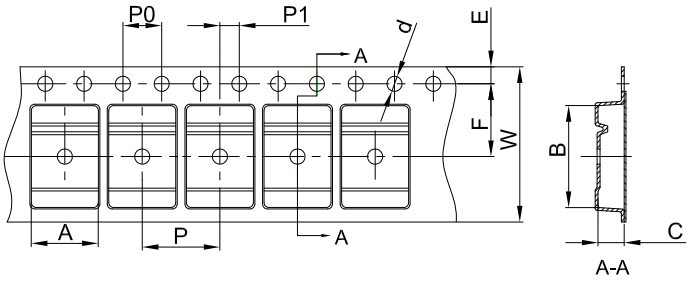

Packaging Description:
TO-252 parts are shipped in tape. The carrier tape is made from a dissipative (carbon filled) polycarbonate resin. The cover tape is a multilayer film (Heat Activated Adhesive in nature) primarily composed of polyester film, adhesive layer, sealant, and anti-static sprayed agent. These reeled parts in standard option are shipped with 25,00 units per 13" or 33.0 cm diameter reel. The reels are clear in color and is made of polystyrene plastic (anti-static coated).

Dimensions are in millimeter										
Pkg type	A	B	C	d	E	F	P0	P	P1	W
TO-252	6.90	10.50	2.70	Ø1.55	1.75	7.50	4.00	8.00	2.00	16.00

TO-252-2L Tape Leader and Trailer

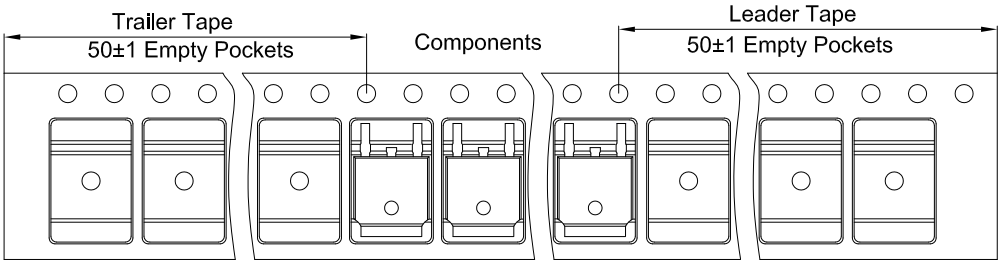

TO-252-2L Reel

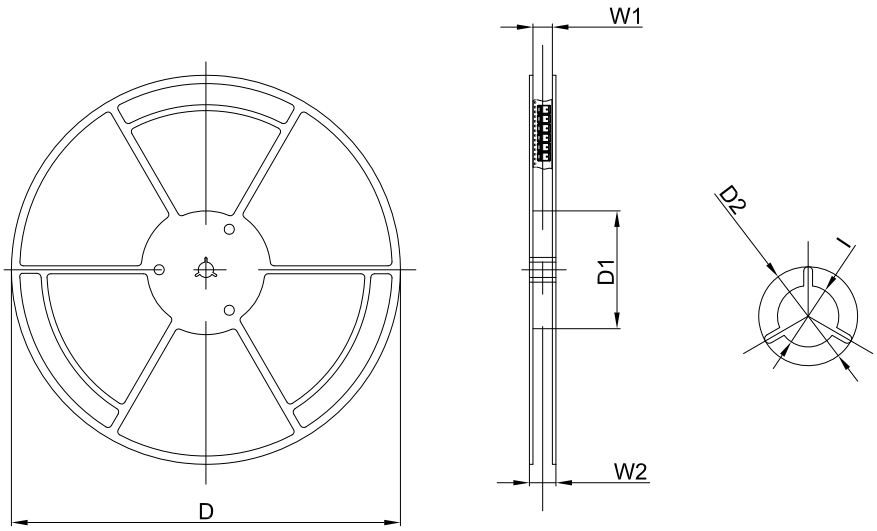

Dimensions are in millimeter						
Reel Option	D	D1	D2	W1	W2	I
13"Dia	330.00	100.00	Ø21.00	16.40	21.00	Ø13.00

REEL	Reel Size	Box	Box Size(mm)	Carton	Carton Size(mm)	G.W.(kg)
2,500 pcs	13inch	2,500 pcs	340×336×29	25,000 pcs	353×346×365	

Downloaded From Oneyac.com

11 Packaging Information

11.2 TO-263-2L Tape and Reel Information

TO-263-2L Embossed Carrier Tape

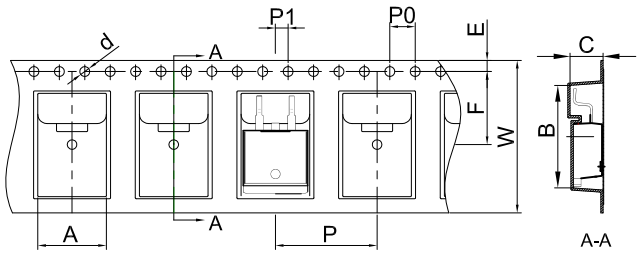

Packaging Description:
TO-263-2L parts are shipped in tape. The carrier tape is made from a dissipative (carbon filled) polycarbonate resin. The cover tape is a multilayer film (Heat Activated Adhesive in nature) primarily composed of polyester film, adhesive layer, sealant, and anti-static sprayed agent. These reeled parts in standard option are shipped with 800 units per 13" or 33.0 cm diameter reel. The reels are clear in color and is made of polystyrene plastic (anti-static coated).

Dimensions are in millimeter										
Pkg type	A	B	C	d	E	F	P0	P	P1	W
TO-263-2L	10.80	16.13	5.21	Ø1.55	1.75	11.50	4.00	16.00	2.00	24.00

TO-263-2L Tape Leader and Trailer

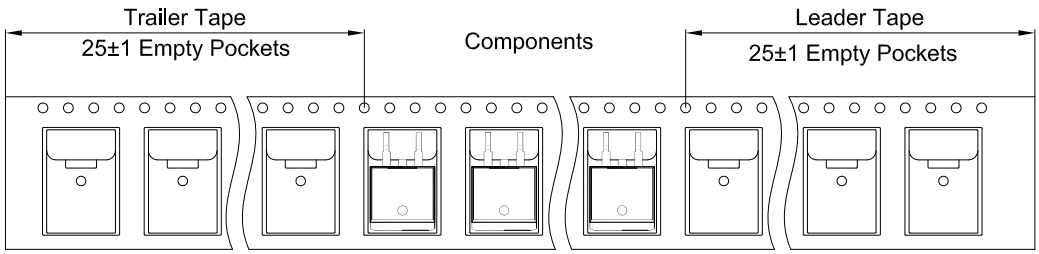

TO-263-2L Reel

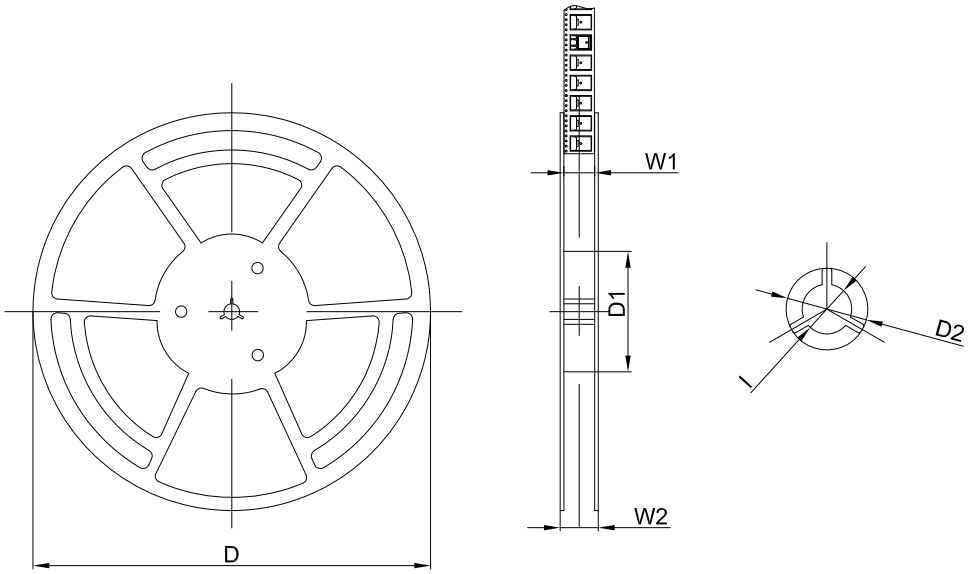

Dimensions are in millimeter						
Reel Option	D	D1	D2	W1	W2	I
13"Dia	Ø330.00	100.00	Ø21.00	24.4	30.4	Ø13.00

REEL	Reel Size	Box	Box Size(mm)	Carton	Carton Size(mm)	G.W.(kg)
800 pcs	13 inch	800 pcs	340×336×36	8,000 pcs	400×353×365	

Downloaded From Oneyac.com

12 Notes and Revision History

12.1 Associated Product Family and Others

To view other products of the same type or IC products of other types, please click the official website of JSCJ -- ***https: www.jscj-elec.com*** for more details.

12.2 Notes

Electrostatic Discharge Caution

This IC may be damaged by ESD. Relevant personnel shall comply with correct installation and use specifications to avoid ESD damage to the IC. If appropriate measures are not taken to prevent ESD damage, the hazards caused by ESD include but are not limited to degradation of integrated circuit performance or complete damage of integrated circuit. For some precision integrated circuits, a very small parameter change may cause the whole device to be inconsistent with its published specifications.

12.3 Revision History

June, 2023: changed from rev - 3.3 to rev - 3.4:

- Page 1, Features, added description of internal current limit;
- Page 2, Orderable Information, changed non green devices to NoRD grade;
- Page 7, Recommend Operating Conditions, removed description of recommended operating conditions;
- Page 8, Thermal Information, added the R_{JC}.

October, 2022: changed from rev - 3.2 to rev - 3.3:

- Page 6, Marking Information, modified CJ78XXF marking.

September, 2022: changed from rev - 3.1 to rev - 3.2:

- Changed the data sheet layout to JSCJ format;
- Page 1, Features, LNR and LDR changed from specific value into typical range;
- Page 4, Note, changed the font format of the text;
- Page 7, Recommended Operating Conditions, changed the content of the description;
- Page 9 ~ 13, Note, added the description of test conditions, and change the description of V_D from 3% to 5%.

July, 2022: changed from rev - 3.0 to rev - 3.1:

- Modified data sheet format:
- All data sheet, added headers, changed font size;
- Page 1, modified footer;
- Page 2, page 3 and page 4, Orderable Information, deleted the description;
- Page 6, changed description format;
- Page 38, DISCLAIMER, deleted the description of "automotive electronics".

June, 2022: released CJ78 series rev - 3.0:

- Assembled CJ7805, CJ7806, CJ7808, CJ7809, CJ7812 devices into the CJ78 series;
- Added Introduction, Available Package, Applications, Pin Configuration and Marking Information,
- Recommended Operating Conditions, ESD Ratings, Thermal Information, Detailed Description, Application
- and Implementation and Notes and Revision History section;
- Deleted obsolete CJ7815 device from the data sheet.

Downloaded From Oneyac.com

DISCLAIMER

IMPORTANT NOTICE, PLEASE READ CAREFULLY

The information in this data sheet is intended to describe the operation and characteristics of our products. JSCJ has the right to make any modification, enhancement, improvement, correction or other changes to any content in this data sheet, including but not limited to specification parameters, circuit design and application information, without prior notice.

Any person who purchases or uses JSCJ products for design shall: 1. Select products suitable for circuit application and design; 2. Design, verify and test the rationality of circuit design; 3. Procedures to ensure that the design complies with relevant laws and regulations and the requirements of such laws and regulations. JSCJ makes no warranty or representation as to the accuracy or completeness of the information contained in this data sheet and assumes no responsibility for the application or use of any of the products described in this data sheet.

Without the written consent of JSCJ, this product shall not be used in occasions requiring high quality or high reliability, including but not limited to the following occasions: medical equipment, military facilities and aerospace. JSCJ shall not be responsible for casualties or property losses caused by abnormal use or application of this product.

Official Website: www.jscj-elec.com

Copyright © JIANGSU CHANGJING ELECTRONICS TECHNOLOGY CO., LTD.

Downloaded From Oneyac.com

单击下面可查看定价，库存，交付和生命周期等信息

>>JSCJ(长晶科技)

Downloaded From Oneyac.com